MIT OpenCourseWare
http://ocw.mit.edu

Electromechanical Dynamics

For any use or distribution of this textbook, please cite as follows:

Woodson, Herbert H., and James R. Melcher. *Electromechanical Dynamics*. 3 vols. (Massachusetts Institute of Technology: MIT OpenCourseWare). http://ocw.mit.edu (accessed MM DD, YYYY). License: Creative Commons Attribution-NonCommercial-Share Alike

For more information about citing these materials or our Terms of Use, visit: http://ocw.mit.edu/terms

Chapter 4

ROTATING MACHINES

4.0 INTRODUCTION

The most numerous and the most widely used electromechanical device in existence is the magnetic field type rotating machine. Rotating machines occur in many different types, depending on the nature of the electrical and mechanical systems to be coupled and on the coupling characteristics desired. The primary purpose of most rotating machines is to convert energy between electrical and mechanical systems, either for electric power generation or for the production of mechanical power to do useful tasks. These machines range in size from motors that consume a fraction of a watt to large generators that produce 10^9 W. In spite of the wide variety of types and sizes and of methods of construction, which vary greatly, most rotating machines fall into two classes defined by their geometrical structures—namely smooth-air-gap and salient-pole. The analysis of the electromechanical coupling systems in rotating machines can thus be reduced to the analysis of two configurations, regardless of the size or type of machine. As is to be expected, some machines do not fit our classification; they are not numerous, however, and their analyses can be performed by making simple changes in the models and techniques presented in this chapter.

After defining the two classes of machine geometry (smooth-air-gap and salient-pole), we establish the conditions necessary for average power conversion and use them as a basis for defining different types of machine. We also derive the equations of motion for the different machine types and solve them in the steady state to describe the machines' principal characteristics. The behavior of machines under transient conditions is covered in Chapter 5.

Before starting the treatment of machines it is important to recognize several significant points. First, as is evident from the treatment, a rotating machine is but one specific embodiment of a more general class of electromechanical devices defined in Chapter 3, and, as such, is conceptually quite simple. In a practical configuration, such as a polyphase machine, the

number of terminal pairs is great enough to make the mathematical description seem lengthy. In no case should mathematical complexity be mistaken for conceptual difficulty. The analysis of rotating machines is conceptually simple and mathematically complex. As our treatment unfolds, it will become clear that there are geometrical and mathematical symmetries that imply simplification techniques. These techniques have been developed to a high degree of sophistication and are essential in the analysis of machine systems. Because our interest here is in the basic physical processes, we forego the special techniques and refer the reader to other texts.*

4.1 SMOOTH-AIR-GAP MACHINES

All rotating machines that fit in the smooth-air-gap classification can be represented schematically by a physical structure like that shown in end

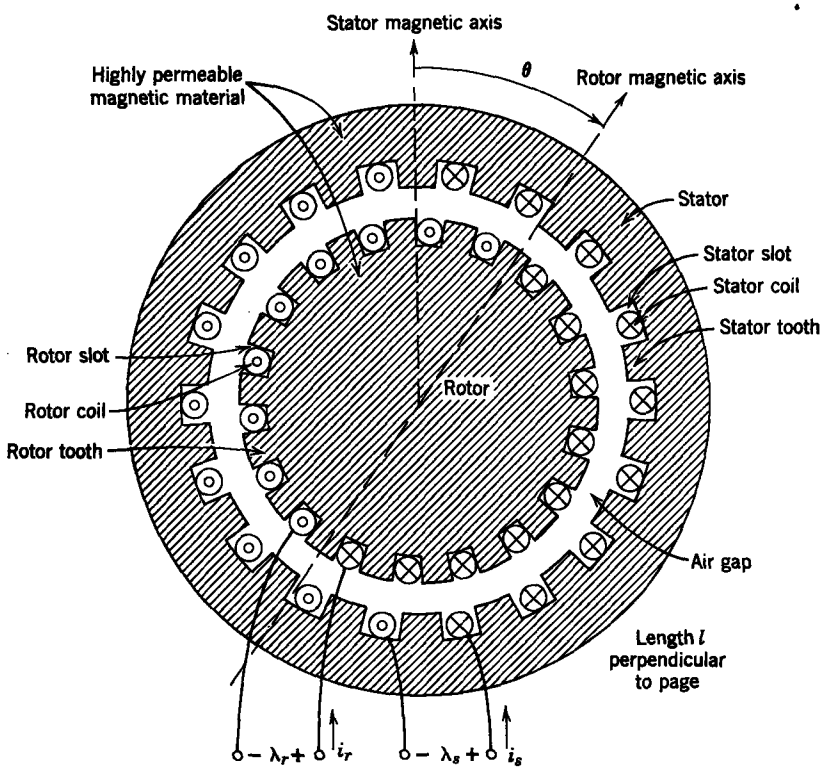

Fig. 4.1.1a Geometry of smooth-air-gap rotating machine showing distributed windings on stator and rotor of a single-phase machine.

* See, for example, D. C. White and H. H. Woodson, *Electromechanical Energy Conversion*, Wiley, New York, 1959, Chapters 4 and 7 to 10.

view in Fig. 4.1.1*a*. Pictures of a stator and a rotor that fall into this classification are shown in Figs. 4.1.2 and 4.1.3.

In the structure of Fig. 4.1.1*a* conductors are laid in axial slots that face the air gap. The number of conductors in each slot depends on the type and size of the machine and varies from 1 in large turbogenerators to 10 to 12 in small induction machines. The conductors of one circuit on one member are in series or series-parallel connection at the ends of the machine. (Note the end turns in Figs. 4.1.2 and 4.1.3.) The circuits are arranged so that a current in one winding will produce the antisymmetrical pattern about an axial plane indicated by the dots and crosses in Fig. 4.1.1*a*. This axial plane is the plane of symmetry of the magnetic field produced by the currents and is therefore called the magnetic axis. The stator and rotor magnetic axes are shown in Fig. 4.1.1.

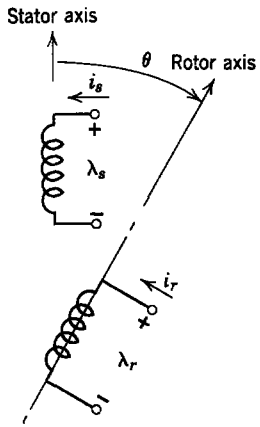

Fig. 4.1.1*b* Schematic representation of the inductors constituting the rotor and stator windings shown in (*a*).

The example in Fig. 4.1.1 has only one circuit (winding) on the stator and one circuit on the rotor. Most machines have more than one circuit on each member. In this case a slot will usually contain conductors from different circuits. Nonetheless, the description given fits each circuit on the rotor or stator.

The rotor is free to rotate and its instantaneous angular position θ is, by convention, the displacement of the rotor magnetic axis with respect to the stator magnetic axis.

The structure of Fig. 4.1.1*a* is called smooth air gap because it can be modeled mathematically with sufficient accuracy by assuming that the magnetic path seen by each circuit is independent of rotor position. Such a model neglects the effects of slots and teeth on magnetic path as the angle is changed. In a real machine (see Figs. 4.1.2 and 4.1.3) the slots and teeth are relatively smaller than those shown in Fig. 4.1.1*a*. Moreover, special construction techniques, such as skewing the slots of one member slightly with respect to a line parallel to the axis,* minimize these effects. In any case, the essential properties of a machine can be obtained with good accuracy by using a smooth-air-gap model, but slot effects are always present as second-order effects in machine terminal characteristics and as first-order problems to machine designers.

* For constructional details of rotating machines see, for example, A. E. Knowlton, ed., *Standard Handbook for Electrical Engineeers*, 9th ed., McGraw-Hill, New York, 1957, Sections 7 and 8. This also includes numerous references to more detailed design treatments.

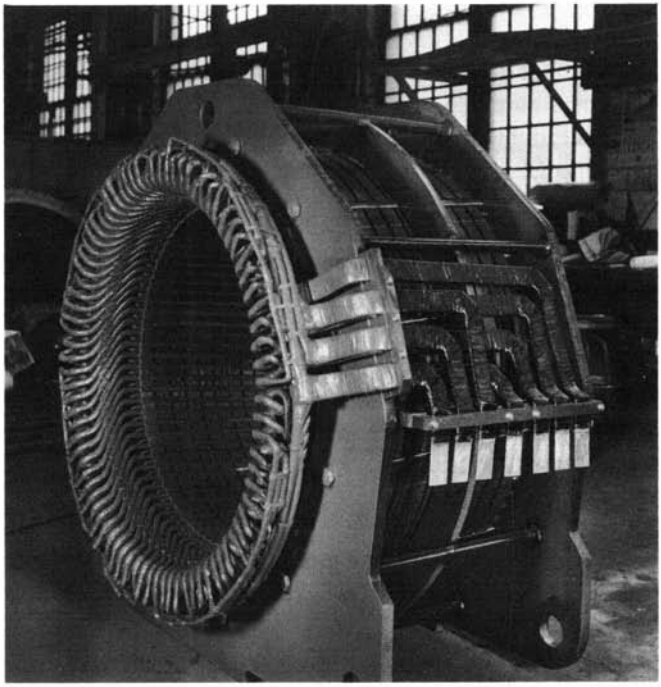

Fig. 4.1.2 Stator (armature) of an induction motor. This is an example of a smooth-air-gap stator. (Courtesy of Westinghouse Electric Corporation.)

4.1.1 Differential Equations

In terms of the conventions and nomenclature for lumped-parameter systems introduced in Chapter 3, the device in Fig. 4.1.1 has magnetic field electromechanical coupling with two electrical terminal pairs and one rotational mechanical terminal pair. Thus the coupling system can be represented symbolically, as in Fig. 4.1.4.

It is conventional practice in machine analysis to assume electrical linearity (no saturation in stator or rotor magnetic material)*; consequently, the electrical terminal relations can be written in terms of inductances that can be functions of the angle θ (see Section 2.1.1 of Chapter 2). The further assumption of a smooth air gap indicates that because the field produced by

* Magnetic saturation in machines is quite important, but it is conventionally treated as a perturbation of the results of an analysis such as we will do. See, for example, White and Woodson, *op. cit.*, pp. 532–535.

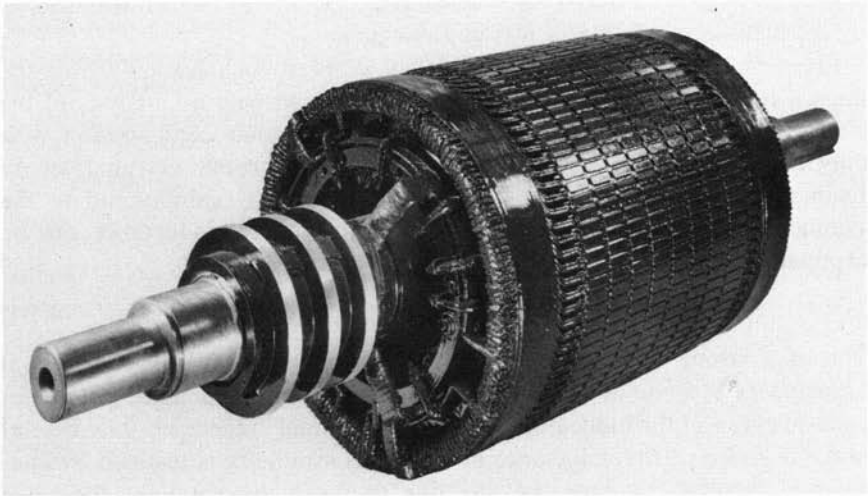

Fig. 4.1.3 Rotor of a wound-rotor induction machine. This is an example of a smooth-air-gap rotor. (Courtesy of Westinghouse Electric Corporation.)

each coil is unaffected by rotor position the self-inductances will be independent of rotor position and the mutual inductance will depend on rotor position. Hence the terminal relations for the coupling system of Fig. 4.1.1 as represented symbolically in Fig. 4.1.4 can be written as

$$\lambda_s = L_s i_s + L_{sr}(\theta) i_r, \tag{4.1.1}$$

$$\lambda_r = L_{sr}(\theta) i_s + L_r i_r, \tag{4.1.2}$$

$$T^e = i_s i_r \frac{dL_{sr}(\theta)}{d\theta}, \tag{4.1.3}$$

where L_s and L_r are the constant self-inductances, $L_{sr}(\theta)$ is the angular-dependent mutual inductance, and the variables $(\lambda_s, \lambda_r, i_s, i_r, T^e, \theta)$ are

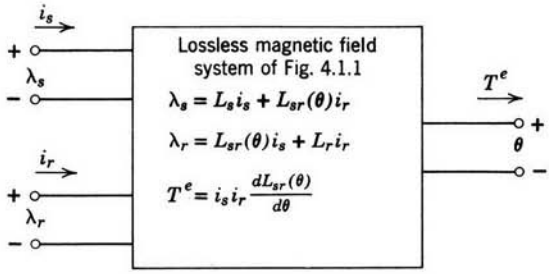

Fig. 4.1.4 Symbolic representation of coupling system in Fig. 4.1.1.

defined in Figs. 4.1.1 and 4.1.4. The torque T^e, given by (4.1.3), was derived by the method of Chapter 3 [(g) in Table 3.1].

From (4.1.1) to (4.1.3) it is clear that we need to know only how the mutual inductance L_{sr} varies with angle to proceed with an analysis of the electromechanical coupling in this machine. A similar configuration with only two slots on the stator and two slots on the rotor was analyzed in Example 2.1.2 of Chapter 2. With reference to that example and to the symmetries of the windings in Fig. 4.1.1*a*, the mutual inductance can be expressed in the general form

$$L_{sr}(\theta) = M_1 \cos\theta + M_3 \cos 3\theta + M_5 \cos 5\theta + \cdots. \tag{4.1.4}$$

This is a cosine series containing only odd harmonics. Thus the mutual inductances at θ and at $-\theta$ are the same, the mutual inductance at $(\theta + \pi)$ is the negative of the inductance at θ, and the mutual inductance at $(-\theta - \pi)$ is the negative of the inductance at $-\theta$. This symmetry is justified by considering qualitatively how the flux due to stator current links the rotor winding as the rotor position is varied.

The winding distribution around the periphery of alternating current machines is normally designed to enhance the fundamental component of mutual inductance M_1 and to suppress all higher harmonics. The purpose of this design criterion is to minimize unwanted harmonic current generation in the machine. On the other hand, in the design of dc machines, other criteria are used and several of the harmonics of (4.1.4) are present in appreciable amounts. Nonetheless, it suffices for the purposes here to assume that the mutual inductance is represented by the space fundamental term only. Such an assumption simplifies the analyses, does not eliminate any fundamental properties of machines, and can be used as the basis for a complete analysis, if we assume that all harmonics are present.* Thus for the remainder of this analysis the mutual inductance $L_{sr}(\theta)$ is specified as

$$L_{sr}(\theta) = M \cos\theta. \tag{4.1.5}$$

and the three terminal relations (4.1.1) to (4.1.3) become

$$\lambda_s = L_s i_s + M i_r \cos\theta, \tag{4.1.6}$$

$$\lambda_r = M i_s \cos\theta + L_r i_r, \tag{4.1.7}$$

$$T^e = -i_s i_r M \sin\theta. \tag{4.1.8}$$

Before beginning a study of the energy conversion properties of the lossless coupling part of the machine in Fig. 4.1.1, it would be worthwhile to inquire into the circuit representation of a machine, including the essential parameters of the machine by itself, which are illustrated in the equivalent circuit of Fig. 4.1.5. On the electrical side the windings have resistances R_s and R_r

* For the general analysis see White and Woodson, *op. cit.*, Chapter 11.

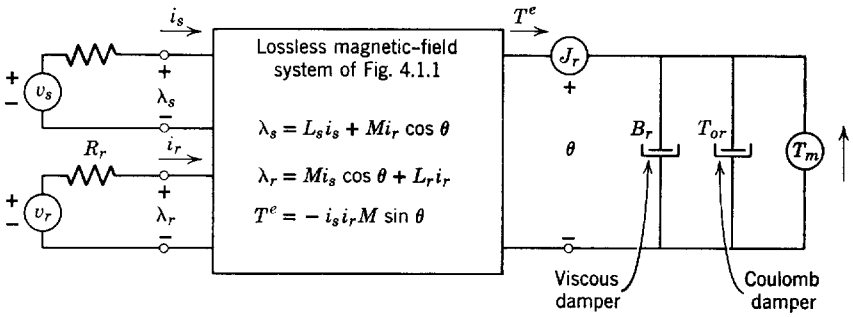

Fig. 4.1.5 Equivalent circuit for machine in Fig. 4.1.1.

which are treated as series resistances external to the lossless coupling system. There are additional losses in the iron (hysteresis and eddy-current losses) which are not included here because they are usually small enough to be treated as a simple perturbation.* On the mechanical side the essential parameters that must be included are the rotor inertia J_r and losses that occur because of friction in bearings and in sliding electrical contacts for exciting the rotor and because of windage losses due to rotation of the rotor in a gas, usually air or hydrogen. It is normally sufficient to represent these mechanical losses as a combination of viscous (B_r) and coulomb (T_{or}) friction, as shown in Fig. 4.1.5. The sources included in Fig. 4.1.5, v_s, v_r, and T_m, are general. Any or all of them may be independently set or they may be dependent on some variable. They may represent passive loads. In addition, they can be replaced by other sources, that is, the electrical terminal pairs can be excited by current sources and the mechanical terminal pair can be excited by a position or velocity source. The point of including the sources is to indicate that, in addition to the essential machine parameters, external circuits must be included before the machine can be made to operate usefully.

Using the equivalent circuit of Fig. 4.1.5, we can write the differential equations that describe the system:

$$v_s = R_s i_s + \frac{d\lambda_s}{dt} \tag{4.1.9}$$

$$v_r = R_r i_r + \frac{d\lambda_r}{dt} \tag{4.1.10}$$

$$T_m + T^e = J_r \frac{d^2\theta}{dt^2} + B_r \frac{d\theta}{dt} + T_{or} \frac{d\theta/dt}{|d\theta/dt|}. \tag{4.1.11}$$

* See, for example, A. E. Fitzgerald and C. Kingsley, Jr., *Electric Machinery*, 2nd ed., McGraw-Hill, New York, 1961, Chapter 7. Although electrical losses can be treated as perturbations when analyzing the behavior of a machine, these losses are vitally important in determining the machine's rating because it is set by thermal limitations in transferring heat generated by losses out of the machine.

Once the sources (or loads) v_s, v_r, and T_m are defined, these three equations with the terminal relations (4.1.6) to (4.1.8) form a complete description of the dynamics of the system, including the machine and the electric and mechanical circuits connected to it.

4.1.2 Conditions for Conversion of Average Power

We next consider the problem of finding the conditions under which the electromechanical coupling system of the machine in Fig. 4.1.1 can convert average power between the electrical and mechanical systems. For this problem a steady-state analysis of the coupling system in Fig. 4.1.4 with ideal sources will suffice. Once the conditions are established, the analysis can be generalized to include nonideal sources and transient conditions.

For this problem the coupling system of Fig. 4.1.4 will be excited by the ideal sources indicated in Fig. 4.1.6. The specific time dependences of these sources are

$$i_s(t) = I_s \sin \omega_s t, \tag{4.1.12}$$

$$i_r(t) = I_r \sin \omega_r t, \tag{4.1.13}$$

$$\theta(t) = \omega_m t + \gamma, \tag{4.1.14}$$

where I_s, I_r, ω_s, ω_r, ω_m, and γ are positive constants and t is the time.

We now ask for the conditions under which the machine with the steady-state excitations of (4.1.12) to (4.1.14) can convert average power between the electrical and mechanical systems. To find these conditions we evaluate the instantaneous power p_m flowing from the coupling system into the position source

$$p_m = T^e \frac{d\theta}{dt} = T^e \omega_m. \tag{4.1.15}$$

Then substitution from (4.1.12) and (4.1.13) into (4.1.8) and of that result into (4.1.15) yield

$$p_m = -\omega_m I_s I_r M \sin \omega_s t \sin \omega_r t \sin (\omega_m t + \gamma). \tag{4.1.16}$$

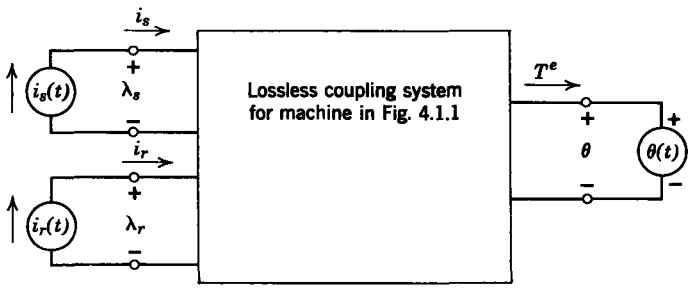

Fig. 4.1.6 Excitations used in derivation of conditions for average power conversion.

To ascertain under what conditions this power can have an average value, trigonometric identities* are used to put (4.1.16) in the form

$$p_m = -\frac{\omega_m I_s I_r M}{4}\{\sin[(\omega_m + \omega_s - \omega_r)t + \gamma] + \sin[(\omega_m - \omega_s + \omega_r)t + \gamma]$$
$$- \sin[(\omega_m + \omega_s + \omega_r)t + \gamma] - \sin[(\omega_m - \omega_s - \omega_r)t + \gamma]\}. \quad (4.1.17)$$

Because a sinusoidal function of time has no average value, (4.1.17) can have a time-average value only when one of the coefficients of t is zero. These four conditions, which cannot in general be satisfied simultaneously, can be written in the compact form

$$\omega_m = \pm\omega_s \pm \omega_r; \quad (4.1.18)$$

for example, when

$$\omega_m = -\omega_s + \omega_r,$$

$$p_{m(\mathrm{av})} = -\frac{\omega_m I_s I_r M}{4}\sin\gamma,$$

and, when

$$\omega_m = \omega_s + \omega_r,$$

$$p_{m(\mathrm{av})} = \frac{\omega_m I_s I_r M}{4}\sin\gamma.$$

It is evident from these expressions that a necessary condition for average power conversion is the frequency condition of (4.1.18). Sufficient conditions for average power conversion are (4.1.18) and $\sin\gamma \neq 0$.

As a result of this analysis, we can state that the whole field of machine theory for smooth-air-gap machines is concerned with how to satisfy the frequency condition of (4.1.18) with the available electrical and/or mechanical sources to obtain the machine characteristics needed for a particular application. It is just this process that has led to the several different machine types presently used. The frequency relations provide the starting point in the invention of new machine types for unusual applications.

4.1.3 Two-Phase Machine

Before describing the different standard machine types, how they are excited to satisfy (4.1.18), and what their essential characteristics are, the smooth-air-gap model of Fig. 4.1.1 will be modified to allow a more realistic portrayal of the energy conversion properties of rotating machines.

It is evident by examination of (4.1.17) that when one of the four possible conditions of (4.1.18) is satisfied, the corresponding term in (4.1.17) becomes a constant, but the other three terms are still sinusoidal time functions

* $\sin x \sin y = \frac{1}{2}[\cos(x - y) - \cos(x + y)]$; $\sin x \cos y = \frac{1}{2}[\sin(x - y) + \sin(x + y)]$.

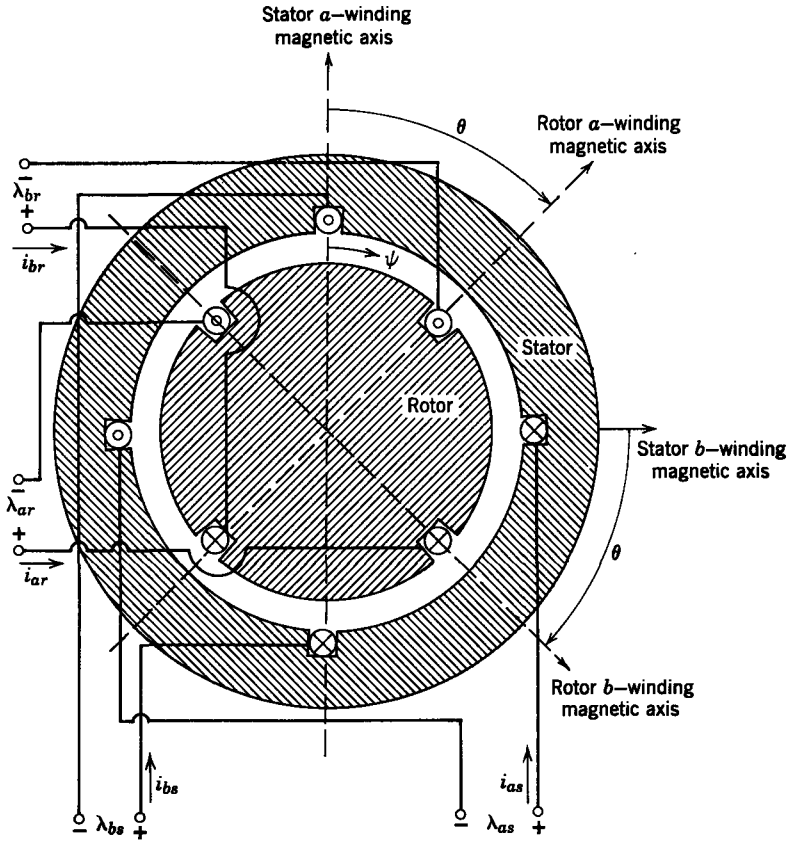

Fig. 4.1.7*a* Cross-sectional view of a two-phase machine with distributed windings represented by single-turn coils.

and each term represents an alternating power flow. These alternating power flows have no average values and can cause pulsations in speed and vibrations that are detrimental to machine operation and life. The alternating flow can be eliminated by adding one additional winding to both rotor and stator, as illustrated in Fig. 4.1.7*a*. The windings of Fig. 4.1.7*a* are represented as being concentrated in single slots for simplicity of illustration. In actual machines the windings are distributed like those of Fig. 4.1.1*a*. and a single slot can carry conductors from both windings. In Fig. 4.1.7 windings *a* on rotor and stator represent the original windings of Fig. 4.1.1. Windings *b* on rotor and stator are identical to the windings *a* in every respect, except that they are displaced mechanically 90° in the positive θ-direction.

The two additional windings in Fig. 4.1.7*a* require two additional electrical terminal pairs and, using the assumptions of constant self-inductances and

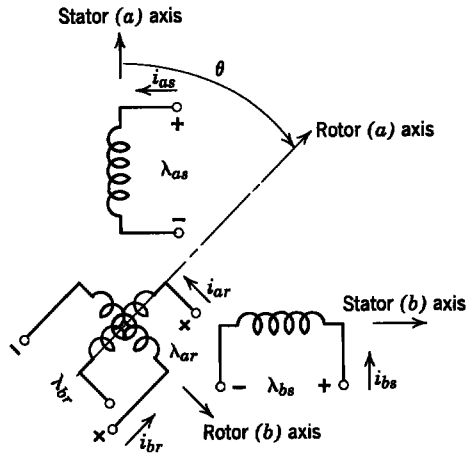

Fig. 4.1.7*b* Schematic representation of balanced two-phase machine in (*a*) showing relative orientations of magnetic axes.

sinusoidally varying mutual inductances discussed before, the terminal relations are now written as

$$\lambda_{as} = L_s i_{as} + M i_{ar} \cos\theta - M i_{br} \sin\theta, \tag{4.1.19}$$

$$\lambda_{bs} = L_s i_{bs} + M i_{ar} \sin\theta + M i_{br} \cos\theta, \tag{4.1.20}$$

$$\lambda_{ar} = L_r i_{ar} + M i_{as} \cos\theta + M i_{bs} \sin\theta, \tag{4.1.21}$$

$$\lambda_{br} = L_r i_{br} - M i_{as} \sin\theta + M i_{bs} \cos\theta, \tag{4.1.22}$$

$$T^e = M[(i_{ar} i_{bs} - i_{br} i_{as}) \cos\theta - (i_{ar} i_{as} + i_{br} i_{bs}) \sin\theta]. \tag{4.1.23}$$

Study of the relative winding geometry in Fig. 4.1.7*a* verifies the correctness of the mutual inductance terms in the electrical terminal relations. Once again, the torque T^e has been found by using the techniques of Chapter 3 [see (g) in Table 3.1].

The windings of Fig. 4.1.7 are called *balanced two-phase windings** because excitation with balanced two-phase currents will result in constant power conversion with no alternating components. To show this the terminal variables of the machine are constrained by the *balanced, two-phase*, current sources

$$i_{as} = I_s \cos\omega_s t, \tag{4.1.24}$$

$$i_{bs} = I_s \sin\omega_s t, \tag{4.1.25}$$

$$i_{ar} = I_r \cos\omega_r t, \tag{4.1.26}$$

$$i_{br} = I_r \sin\omega_r t \tag{4.1.27}$$

* More is said about phases in Section 4.1.7.

and by the angular position source

$$\theta = \omega_m t + \gamma. \tag{4.1.28}$$

The use of these terminal constraints with the instantaneous power given by (4.1.15) and the torque T^e given by (4.1.23) yields, after some trigonometric manipulation,*

$$p_m = -\omega_m M I_s I_r \sin\,[(\omega_m - \omega_s + \omega_r)t + \gamma]. \tag{4.1.29}$$

This power can have an average value only when the coefficient of t is zero, that is, when

$$\omega_m = \omega_s - \omega_r \tag{4.1.30}$$

for which condition (4.1.29) reduces to

$$p_m = -\omega_m M I_s I_r \sin \gamma. \tag{4.1.31}$$

This is still the instantaneous power out of the machine, but it is now constant in spite of the ac electrical excitation. Note further that (4.1.30) is one of the four conditions of (4.1.18). Thus the additional windings with proper excitation have produced only a single frequency condition (4.1.30) for average power conversion, and when this condition is satisfied the instantaneous power is constant and equal to the average value.

The other three conditions of (4.1.18) can be achieved individually in the machine of Fig. 4.1.7 with the excitations of (4.1.24) to (4.1.28) by changing the time phase of one stator current and/or one rotor current by 180°.

When the two stator currents or the two rotor currents are unbalanced in amplitude or the phase difference is changed from 90°, the pulsating power flow will again occur even when one of the conditions of (4.1.18) is satisfied. The analysis of these situations is straightforward trigonometry and is not carried out here.

4.1.4 Air-Gap Magnetic Fields

It is helpful for qualitative physical reasoning and for a more thorough understanding of the coupling mechanism occurring in rotating machines to think in terms of the magnetic fields that exist in the air gap. To develop these ideas consider again the machine in Fig. 4.1.7*a* but with only the stator excited by current sources. The assumption that rotor-to-stator mutual inductance varies sinusoidally with rotor position implies that the flux density produced in the air gap by a current in a winding varies sinusoidally with angular position; that is, a current in stator winding *a* will produce an air-gap flux density whose radial component is maximum along the magnetic axis (positive in one direction, negative in the other) and varies sinusoidally

* $\sin(x - y) = \sin x \cos y - \cos x \sin y$, $\cos(x + y) = \cos x \cos y - \sin x \sin y$.

between these extremes. We now assume that the stator windings of Fig. 4.1.7*a* are excited by the two-phase current sources of (4.1.24) and (4.1.25) and look at the space distribution of radial air-gap flux density produced by these currents at different instants of time. For this we use the angle ψ defined in Fig. 4.1.7*a* to indicate position in the air gap and we recognize that the air-gap flux density produced by current in a winding is proportional to the current producing it. Consequently, with reference to Fig. 4.1.7*a*, we can write for the instantaneous radial flux density due to current in stator winding *a*

$$B_{ra} = B_{rm} \cos \omega_s t \cos \psi \tag{4.1.32}$$

and for stator winding *b*

$$B_{rb} = B_{rm} \sin \omega_s t \sin \psi, \tag{4.1.33}$$

where B_{rm} is a constant related to the current amplitude I_s. These component flux densities and the resultant air-gap flux density are sketched for five values of time in Fig. 4.1.8. For the interval shown the resultant flux density (B_r) is sinusoidally distributed in space, has a constant amplitude (B_{rm}), and moves in the positive ψ-direction as time progresses. An extension of this process would show that these facts remain true for all time and that the resultant flux density makes one revolution in $(2\pi/\omega_s)$ sec or it rotates with an angular speed ω_s.

A similar argument for the rotor of Fig. 4.1.7*a* with the excitation of (4.1.26) and (4.1.27) shows that these rotor currents produce a flux density in the air gap that is sinusoidally distributed around the periphery, has constant amplitude, and has an angular velocity ω_r *with respect to the rotor.*

It is to be expected from simple considerations of the tendency of two magnets to align themselves, that a steady torque and therefore constant power conversion will occur when the rotor and stator fields are fixed in space relative to each other and the rotor is turning at constant angular velocity. To accomplish this a mechanical speed given by (4.1.30) is required. Thus the condition for average power conversion can be interpreted as establishing the condition under which the stator and rotor fields, both of which rotate with respect to the members carrying the excitation currents, are fixed in space relative to each other. Furthermore, we expect the torque (and average power) to be a function of the constant angle of separation of the axes of symmetry of the two fields. This variation with angle is indicated by the sin γ term in (4.1.31). Examination of (4.1.24) to (4.1.28) with the ideas introduced in Fig. 4.1.8 shows that γ is the angle by which the rotor magnetic field axis precedes the stator magnetic field axis around the air gap in the positive θ-direction. Thus the torque [or power in (4.1.31)] is proportional to $(-\sin \gamma)$.

It must be recognized that this analysis of air-gap magnetic fields is idealized. With excitation provided by finite-size coils in finite-size slots and

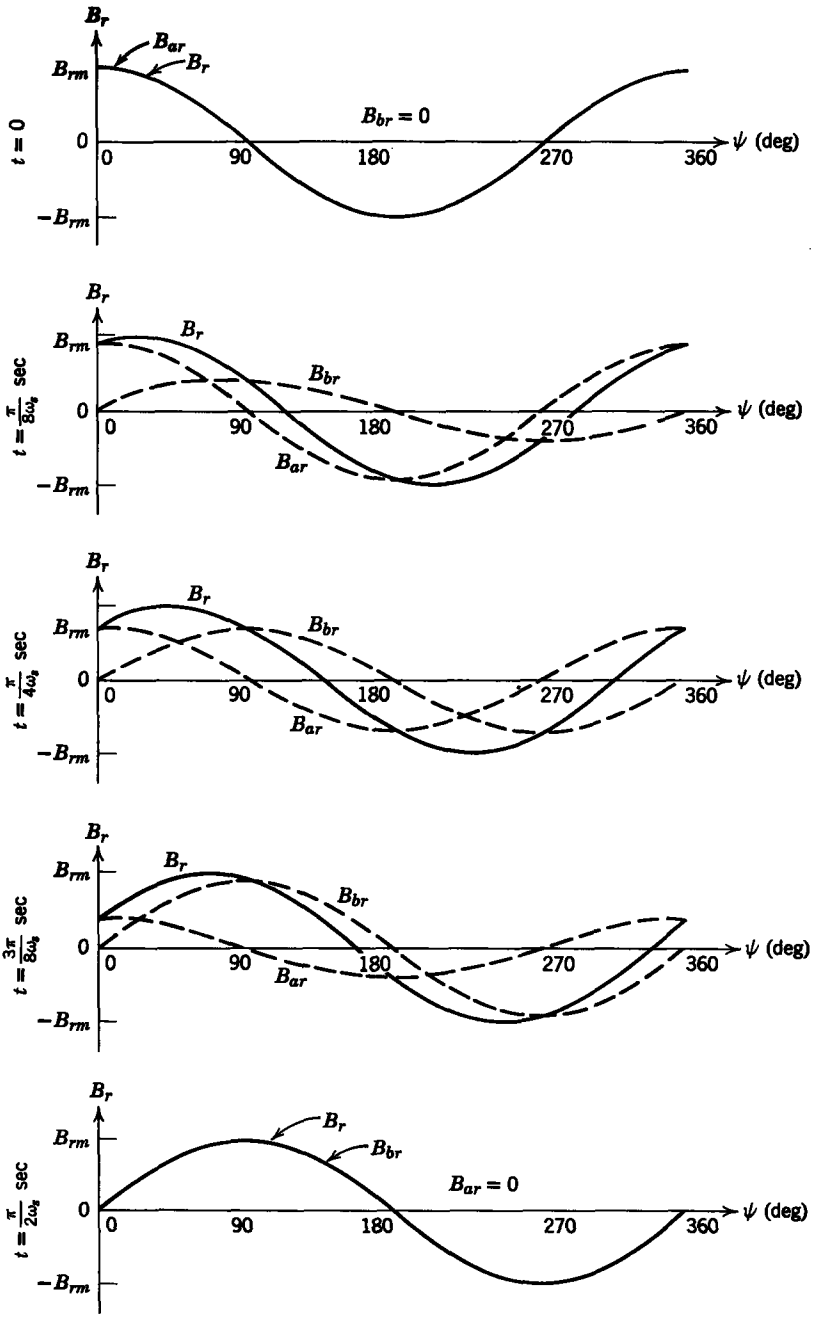

Fig. 4.1.8 Component (B_{ar} and B_{br}) and resultant (B_r) flux density distributions in a balanced two-phase machine due to balanced two-phase stator currents.

usually with equal numbers of turns in all slots, the air-gap flux density will not be exactly sinusoidal. Nonetheless, the simple picture presented is a design objective with ac machines and it yields remarkably accurate results for practical machines. (See part (c) of Prob. 4.4.)

We now reconsider the machine of Fig. 4.1.1 with the excitations of (4.1.12) to (4.1.14) and apply the rotating field ideas. Because the rotor-stator mutual inductance is a sinusoidal function of space, the air-gap flux density will still have a sinusoidal space distribution around the air gap. But now each field, rotor and stator, being excited by a sinusoidal current in a single coil keeps a fixed sinusoidal space distribution with respect to its exciting coil and varies periodically in amplitude. Such an alternating field can be represented by two constant-amplitude fields (B_{r+} and B_{r-}) rotating in opposite directions, as illustrated for one quarter cycle of the stator excitation in Fig. 4.1.9. Thus the stator excitation produces two such fields rotating with angular velocity $\pm\omega_s$ with respect to the stator. Similarly, the rotor excitation produces two fields rotating with angular velocity $\pm\omega_r$ *with respect to the rotor*. Thus each of the four conditions of (4.1.18) represents the situation in which the mechanical speed is adjusted to the proper value to make one component of rotor field fixed in space relative to one component of stator field. When one of these conditions is satisfied, the other three conditions are not, and the interactions of these other field components give rise to alternating torque and alternating power flow. As a consequence, the addition of the second set of windings in Fig. 4.1.7 can be interpreted as being for the purpose of eliminating those field components that do not produce average power conversion.

4.1.5 Discussion

Although these analyses have been made for special cases, the method is quite general; for instance, the analytical techniques are the same when the restriction of a space fundamental mutual inductance variation is removed and the more general form of (4.1.4) is used. Furthermore, the windings added to the machine of Fig. 4.1.1 to obtain the machine of Fig. 4.1.7 need not be identical to the original windings, nor must they be exactly in space quadrature with them. The only requirement for a correct analysis of the coupling mechanisms is that the electrical terminal relations be accurate representations of the physical system under study. The particular restrictions chosen here are representative of design objectives for practical rotating machines and of techniques used in their analysis.

The assumption has been made that stator circuits are excited by currents of the single frequency ω_s and rotor circuits are excited by currents of the single frequency ω_r. This analysis is easily generalized to any number of

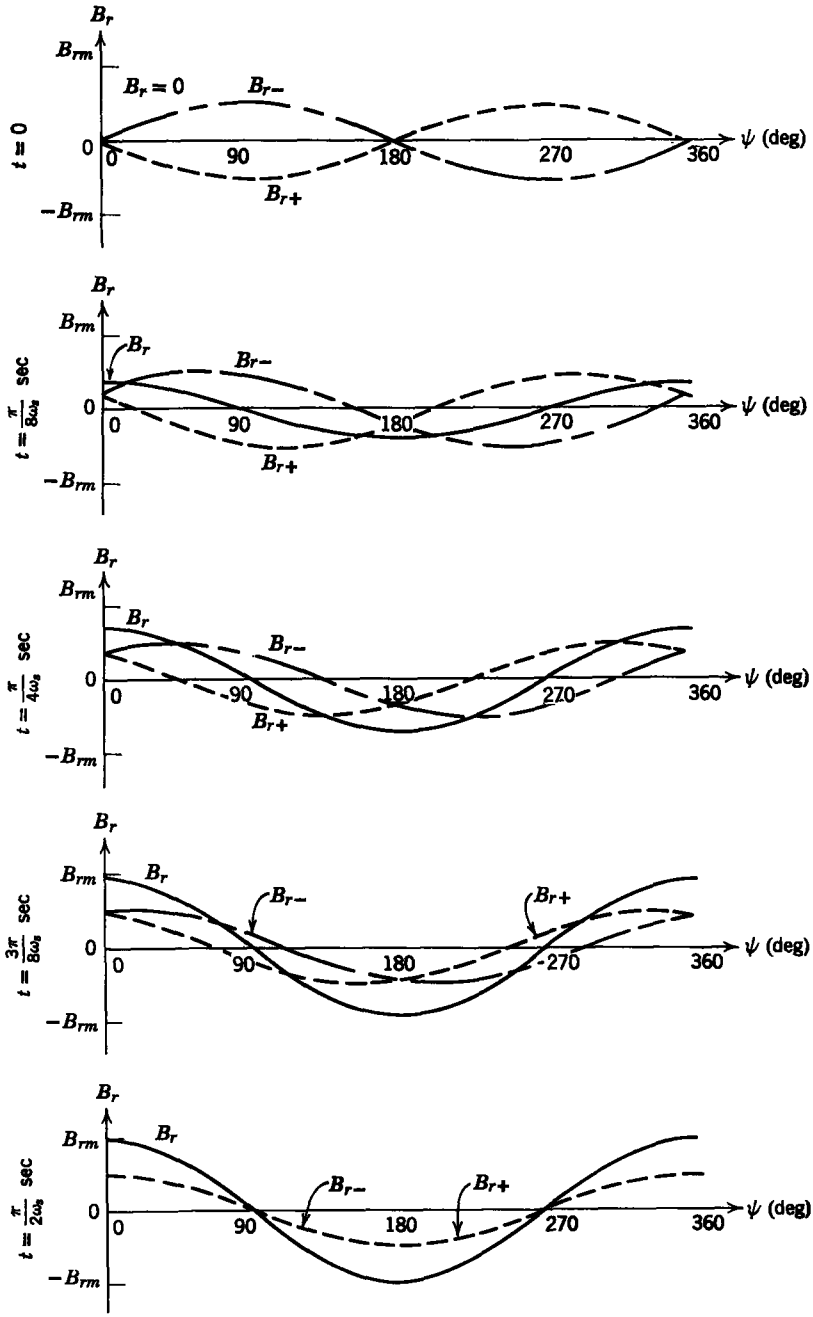

Fig. 4.1.9 Component (B_{r+} and B_{r-}) and resultant (B_r) flux density distributions in a single-phase machine with sinusoidal excitation current on the stator.

frequencies on each member (rotor and stator). The result is that for a component of current at a particular frequency to participate in the average power conversion process there must be a current on the other member whose frequency combines with the mechanical velocity and the other electrical frequency to satisfy one of the four conditions of (4.1.18).

The analyses have been done by assuming a steady-state problem with electrical current sources and a mechanical position source. The results are still valid when the sources are changed to voltage and torque sources or to dependent sources of any type. Moreover, transient problems can be analyzed by writing the complete differential equations for the machine and the electrical and mechanical circuits to which it is connected and using the techniques of Chapter 5. The steady-state analysis is representative of the final conditions usually reached in machine operation. Transients of interest include the one necessary to reach steady-state conditions (e.g., starting transient) and those that occur when something forces the operation away from steady-state conditions (e.g., a sudden change in load torque on a motor).

The discussion of air-gap magnetic fields was based on the simple model of a sinusoidal distribution of flux density in space and a sinusoidal variation of flux density with time. When the space distributions and time variations are not sinusoidal they can often be represented by Fourier series. Consequently, our discussion of air-gap magnetic fields can be applied to individual Fourier components to obtain insight into the interactions occurring in the machine.

In summary, our look at the smooth-air-gap machine in terms of simple models has a lot more generality than we at first might suspect. These simple models are building blocks with which we can build understanding of the behavior of complex machines.

4.1.6 Classification of Machine Types

The results of the steady-state analysis expressed as (4.1.18) for the configuration of Fig. 4.1.1 and as (4.1.30) for the machine of Fig. 4.1.7 are used to define conventional machine types. From one viewpoint rotating-machine theory boils down to the practical ways of satisfying the frequency conditions for average power conversion, given the available electrical and mechanical sources and loads and the desired machine characteristics.

In the following sections we indicate how the frequency condition is met and what the steady-state characteristics are for several conventional machine types.

4.1.6a Synchronous Machines

Consider the two-phase machine of Fig. 4.1.7 with direct current applied to the rotor ($\omega_r = 0$) and balanced, two-phase currents of frequency ω_s

applied to the stator. The condition of (4.1.30) indicates that the machine can convert average power only when the rotor is turning with the single value of speed

$$\omega_m = \omega_s. \tag{4.1.34}$$

These constraints yield a *synchronous* machine, so named because it can convert average power only at one mechanical speed—the synchronous speed ω_s determined by the stator excitation frequency.

In a similar way we can also make a synchronous machine by applying direct current to the stator and alternating current to the rotor. In this case the synchronous speed is determined by the frequency of the rotor currents.

The most common application of a smooth-air-gap, synchronous machine is as the generator, called alternator or turboalternator, that is driven by a steam turbine to generate power. In this machine the ac or *armature* windings are on the stator and the dc or *field* winding is on the rotor. The direct current for the field winding is usually fed through carbon or metal-graphite brushes that make contact with slip rings on the rotor. A large turboalternator with the end bell removed is shown in Fig. 4.1.10.

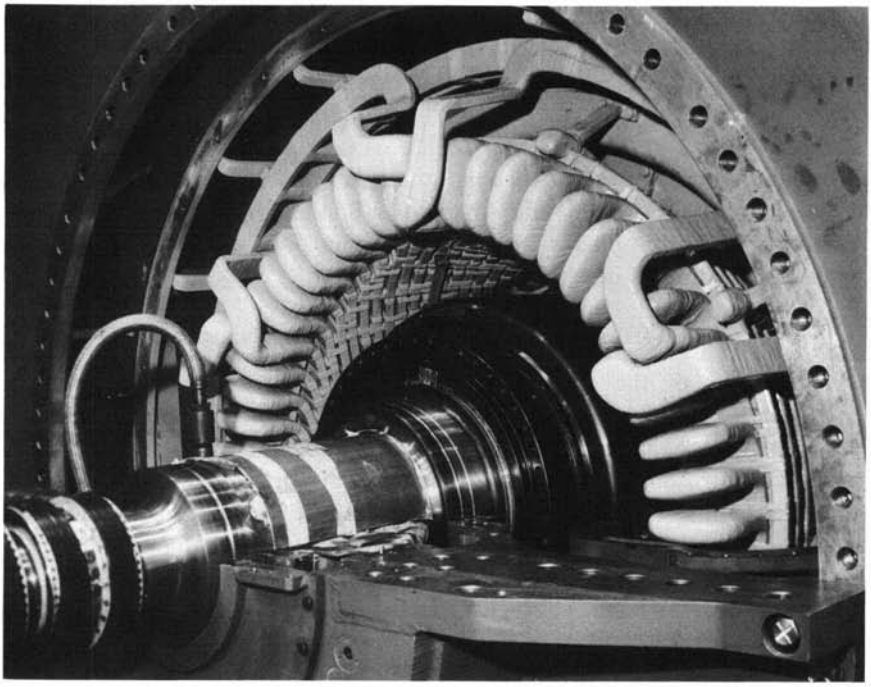

Fig. 4.1.10 Turboalternator partly assembled for test. This is a 3600-rpm, 192,000-kVA machine showing rotor in place with the upper half of the bearing and the end shield removed. The slip rings (or collector rings) for supplying current to the rotor (field) winding are in the foreground. (Courtesy of General Electric Company.)

Courtesy of General Electric Company. Used with permission.

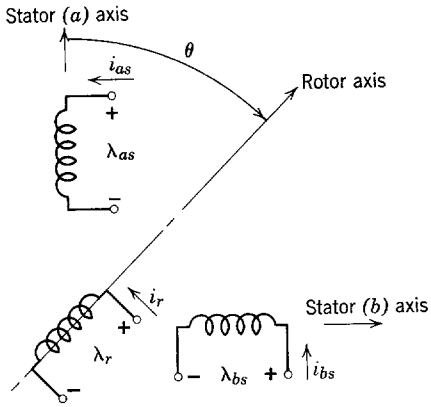

Fig. 4.1.11 Schematic representation of smooth-air-gap synchronous machine with field (dc) winding on the rotor and a balanced two-phase stator (armature) winding.

Some of the principal steady-state characteristics of synchronous machines can be illustrated by considering the machine shown schematically in Fig. 4.1.11. The electrical and mechanical terminal relations are

$$\lambda_{as} = L_s i_{as} + M i_r \cos\theta, \tag{4.1.35}$$

$$\lambda_{bs} = L_s i_{bs} + M i_r \sin\theta, \tag{4.1.36}$$

$$\lambda_r = L_r i_r + M(i_{as}\cos\theta + i_{bs}\sin\theta), \tag{4.1.37}$$

$$T^e = M i_r(i_{bs}\cos\theta - i_{as}\sin\theta). \tag{4.1.38}$$

[These are (4.1.19) to (4.1.21) and (4.1.23) with $i_{br} = 0$ and λ_{ar} and i_{ar} replaced by λ_r and i_r, respectively.]

Synchronous machines are normally operated with the stator windings excited by voltage sources. We express our results in these terms. We find it convenient, however, to constrain the stator winding currents analytically with the balanced, two-phase set

$$i_{as} = I_s \cos\omega t, \tag{4.1.39}$$

$$i_{bs} = I_s \sin\omega t, \tag{4.1.40}$$

and to consider I_s as an unknown in the analysis. We constrain the rotor current to be constant

$$i_r = I_r \tag{4.1.41}$$

and the angle θ with the position source

$$\theta = \omega t + \gamma. \tag{4.1.42}$$

We see that the condition for average power conversion (4.1.30) is automatically satisfied.

It can be verified by direct substitution of (4.1.39) to (4.1.42) into (4.1.37) that the rotor flux linkage λ_r is constant. Thus, under steady-state conditions, there is no voltage induced in the rotor circuit, and we could have applied a constant-voltage source, as we normally do in practice. In such a case the rotor current is constant and determined only by the applied voltage and rotor circuit resistance. Consequently, there is no loss in generality by specifying the rotor current as in (4.1.41). For transient conditions there is a difference between voltage and current excitation of the rotor.

Substitution of (4.1.39) to (4.1.42) into (4.1.38), yields for the instantaneous torque produced by the machine

$$T^e = -MI_rI_s \sin \gamma. \tag{4.1.43}$$

For the analysis of the energy conversion properties of large synchronous machines the mechanical (friction) losses are neglected because they are a small fraction of the power converted by the machine. Thus we follow this procedure and assume that the torque expressed by (4.1.43) is applied to the mechanical load (or source) on the shaft [T_m in Fig. 4.1.5].

To find the electrical terminal characteristics we need to evaluate the stator terminal voltages. Substitution of (4.1.39) to (4.1.42) into (4.1.35) and (4.1.36) yields

$$\lambda_{as} = L_sI_s \cos \omega t + MI_r \cos (\omega t + \gamma), \tag{4.1.44}$$

$$\lambda_{bs} = L_sI_s \sin \omega t + MI_r \sin (\omega t + \gamma). \tag{4.1.45}$$

These two flux linkages are sinusoidal functions of time with a single frequency ω. Moreover, λ_{bs} is the same as λ_{as}, except for a shift of 90° in time phase. The currents exciting these two windings are identical in amplitude and different in phase by the same 90°. Consequently, we expect the electrical behavior of the two stator windings to be the same except for this phase shift; thus we analyze only winding a. When considering power into or out of the stator, we multiply the result for one winding by two to account for the second winding.

As is the usual practice in the analysis of the energy conversion properties of large synchronous machines, we neglect winding resistances and express the terminal voltage of stator winding a as

$$v_{as} = \frac{d\lambda_{as}}{dt} = \frac{d}{dt}[L_sI_s \cos \omega t + MI_r \cos (\omega t + \gamma)]. \tag{4.1.46}$$

Because this expression involves sinusoidal functions of time with the single frequency ω, it is convenient to express the quantities in terms of complex functions and to use vector diagrams to illustrate electrical properties Hence we write

$$i_{as} = \mathrm{Re}\,(I_se^{j\omega t}), \qquad v_{as} = \mathrm{Re}\,(\hat{V}_se^{j\omega t}), \tag{4.1.47}$$

where I_s is real and $\hat{V}_s$ is complex. We substitute this expression for the voltage into (4.1.46) replace the time functions by their complex equivalents,

$$\cos \omega t = \mathrm{Re}\,(e^{j\omega t}), \qquad \cos(\omega t + \gamma) = \mathrm{Re}\,(e^{j\gamma}e^{j\omega t}),$$

drop the Re, and cancel the $e^{j\omega t}$ terms to get

$$\hat{V}_s = j\omega L_s I_s + j\omega M I_r e^{j\gamma}. \tag{4.1.48}$$

The last term in this equation is a voltage source that depends on rotor current I_r and rotor phase angle γ. It is conventionally designated as

$$\hat{E}_f = j\omega M I_r e^{j\gamma}, \tag{4.1.49}$$

the subscript f denoting dependence on field (rotor) current. The use of (4.1.49) in (4.1.48) yields the expression

$$\hat{V}_s = j\omega L_s I_s + \hat{E}_f. \tag{4.1.50}$$

This steady-state stator (armature) terminal voltage is used to construct a simple steady-state equivalent circuit for one phase of a balanced two-phase synchronous machine with balanced excitation, as shown in Fig. 4.1.12.* Note from this figure that because $\hat{E}_f$ is independently adjustable the current I_s can be controlled in magnitude and phase relative to $\hat{V}_s$ and the synchronous machine can act as a motor or generator. The quantity $\omega_s L_s$ is conventionally called the *synchronous reactance* and is simply the reactance of the self-inductance of a stator winding.

The complex quantities in (4.1.50) and the equivalent circuit of Fig. 4.1.12 can be used to interpret the properties of a synchronous machine. To do this we sketch the complex quantities as vectors on the complex plane for two conditions in Fig. 4.1.13. To put our analysis in tune with convention we define the *torque angle* δ as measured *from* $\hat{V}_s$ *to* $\hat{E}_f$, as shown in Fig. 4.1.13. A simple geometrical construction illustrated in Fig. 4.1.13 shows that

$$\omega L_s I_s \sin \gamma = V_s \sin \delta, \tag{4.1.51}$$

where $V_s = |\hat{V}_s|$. Thus from (4.1.43) and (4.1.49)

$$T^e = -\frac{E_f V_s}{\omega^2 L_s} \sin \delta, \tag{4.1.52}$$

where $E_f = |\hat{E}_f|$. This is the expression for the torque normally used in the analysis of

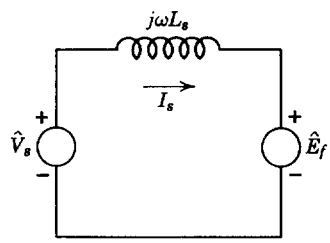

Fig. 4.1.12 Steady-state equivalent circuit for one phase of a balanced two-phase synchronous machine with balanced excitation; $\hat{E}_f$ is defined by (4.1.49).

* This same process, which uses an equivalent circuit for one phase, is also applied to machines with more than two phases.

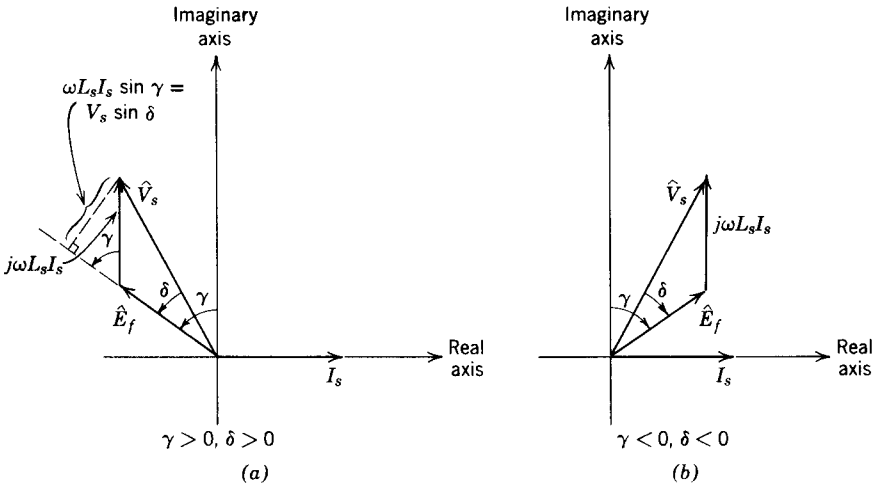

Fig. 4.1.13 Diagrams showing relations among variables in synchronous machine: (*a*) generator operation in which γ and δ (measured positive in the counterclockwise direction) are positive; (*b*) motor operation in which γ and δ are negative.

synchronous machines. It is expressed in terms of the magnitude of the stator voltage because this quantity is usually constant, as determined by the source supplying (or absorbing) electrical power.

The instantaneous power into the stator windings is

$$p_e = v_{as}i_{as} + v_{bs}i_{bs}. \tag{4.1.53}$$

It can be verified with some algebra and trigonometry that this power is equal to the mechanical power out of the shaft

$$p_e = p_m = \omega T^e = -\frac{E_f V_s}{\omega L_s}\sin\delta. \tag{4.1.54}$$

Thus the electromechanical power conversion occurs at a constant rate between the stator circuits and the mechanical system connected to the shaft. The rotor (field) circuit does not participate in the conversion process except to control the dependent source E_f. The power required to excite the field winding as a fraction of the stator (armature) power rating varies from 0.5 per cent in large turboalternators to a few per cent in synchronous motors. It is for this reason that the field winding is usually on the rotor, the result being that sliding contacts have to handle less power.

When a synchronous machine is operated with a constant voltage supply (V_s) to the stator and a constant field current (constant E_f), the torque-angle characteristic is the simple sinusoid shown in Fig. 4.1.14. The machine can

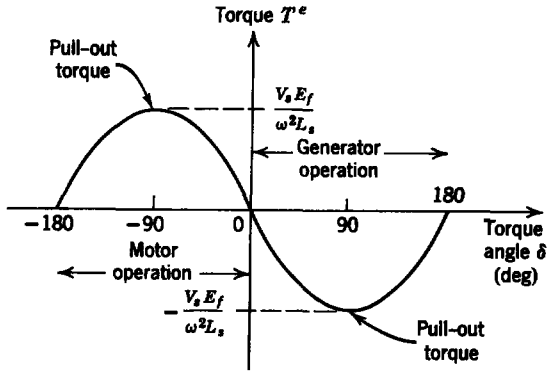

Fig. 4.1.14 Torque versus torque angle for a synchronous machine with constant stator voltage amplitude and constant rotor current.

supply any torque required by the shaft load (or supply) in the range

$$-\frac{V_s E_f}{\omega^2 L_s} < T^e < \frac{V_s E_f}{\omega^2 L_s}$$

and operate as a motor or generator. Any attempt to demand (or supply) a torque outside this range will surpass the ability of the machine and it will no longer run at synchronous speed and produce an average torque. This process of loss of synchronism is called *pulling out of step* and the maximum torque the machine can supply is called the *pull-out torque*.

We shall demonstrate one additional property of synchronous machines, that of adjusting the power factor (phase angle between stator terminal voltage and current) by varying the field (rotor) current. We shall illustrate the property by using motor operation; however, the general features of the analysis also hold for generator operation.

We assume motor operation with constant-amplitude, balanced, two-phase voltages applied to the stator windings of the machine in Fig. 4.1.11. A constant torque load T_m is applied to the machine, and the field (rotor) current I_r can be set to different values. We neglect stator winding resistance and friction losses. We consider three cases illustrated on the torque angle curves of Fig. 4.1.15*a*, the vector relations among the variables being shown in Figs. 4.1.15*b*, *c*, and *d*. Note two things in studying the vector diagrams of Fig. 4.1.15. First, as the field current I_r is increased from a low value I_{r1} to a high value I_{r3}, the magnitude of the stator current passes through a minimum. Second, for the same variation in I_r the phase angle between stator voltage and current reverses sign. An analysis of this type is used to produce a so-called *V*-curve like that shown in Fig. 4.1.15*e*, which is a plot of

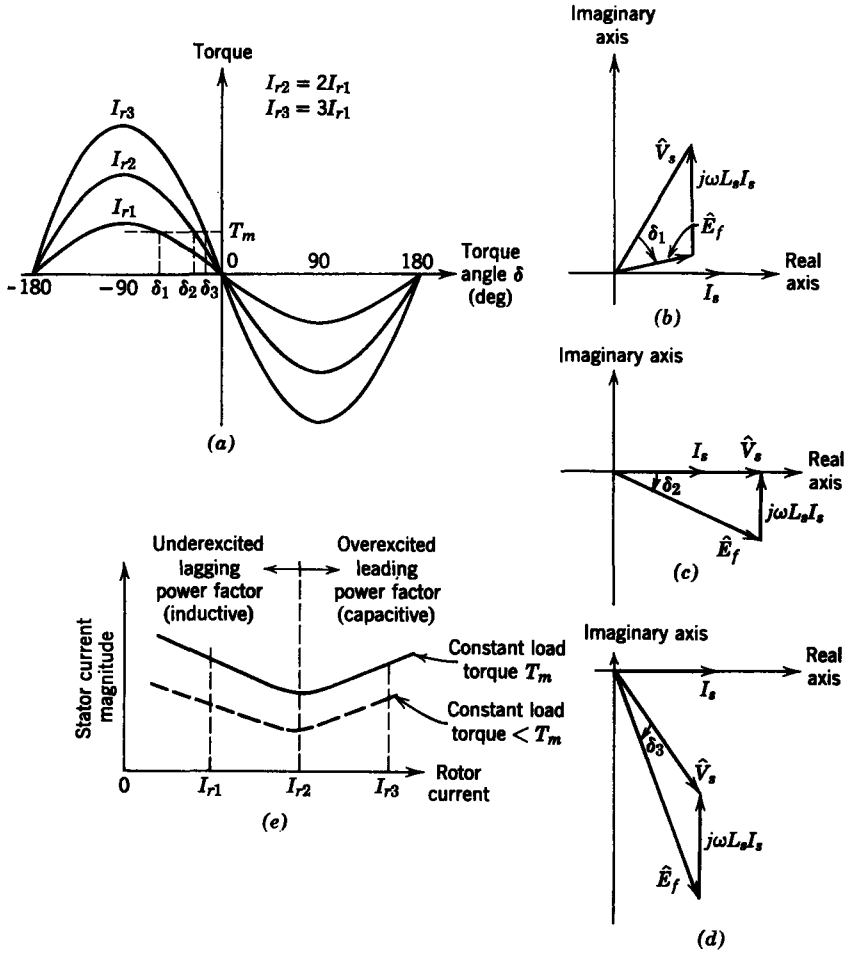

Fig. 4.1.15 Illustration of the performance of a synchronous motor as the field excitation is varied: (*a*) torque versus torque angle; (*b*) rotor current I_{r1}; (*c*) rotor current I_{r2}; (*d*) rotor current I_{r3}; (*e*) synchronous motor *V*-curve.

stator current amplitude as a function of field current with *stator voltage amplitude and load torque held constant*. For small values of field current the machine is said to be underexcited; it appears inductive to the electrical sources and operates with a lagging power factor. For large values of field current the machine is said to be overexcited; it appears capacitive to the electrical sources and operates with a leading power factor.*

* Power factor is defined as $\cos\theta$, where θ is the phase-angle between the current and voltage. A power factor of unity indicates that the load is purely resistive. See, for example, R. M. Kerchner and G. F. Corcoran, *Alternating-Current Circuits*, Wiley, New York, 1955.

In many applications of synchronous motors the machines have adequate field winding capacity for overexcitation and the capacitive characteristics are used for power-factor correction. Special machines, called *synchronous condensers*, are actually synchronous motors that run with no mechanical load and are used as continuously variable capacitors to adjust power factor and regulate voltage on electric power transmission systems.

In this presentation we have discussed only a few of the principal features of synchronous machines. There are many others, depending on the application, and they are studied by the same techniques. Our treatment is intended to be only an introduction to synchronous-machine characteristics. A complete study would fill a book by itself.*

In our analysis we used a two-phase machine as an example. Virtually all synchronous machines manufactured are three-phase because the power supply is usually three-phase. Three-phase synchronous machines have the same energy conversion properties and steady-state characteristics as the two-phase machine of our examples. In fact, a standard procedure in the analysis of a three-phase machine is to transform the electrical variables to obtain the equations for an equivalent two-phase machine. This simplifies the mathematics in the analysis.†

This analysis was made with direct current applied to the rotor (field) winding. The rotor can, and sometimes is, replaced by a permanent-magnet rotor, an arrangement that has the two advantages of requiring no power to maintain the field and no sliding electrical contacts. This also has two primary disadvantages: (a) the amplitude of the magnetic field is fixed by the permanent magnet and cannot be controlled externally during operation, and (b) the magnetic flux densities obtainable with permanent magnet materials are considerably smaller than those obtainable with current-excited, high-permeability iron. As a result of the second disadvantage, permanent magnets are normally used in small synchronous machines.

4.1.6b Induction Machines

An *induction* machine is conventionally defined as one in which single-frequency alternating currents are fed into the stator circuits and the rotor circuits are all short circuited. Rotor currents are obtained by induction from the stator, hence the name.

To determine that an induction machine can convert average power, consider again the machine of Fig. 4.1.7 with the stator currents constrained by balanced two-phase sources.

$$i_{as} = I_s \cos \omega_s t, \tag{4.1.55}$$

$$i_{bs} = I_s \sin \omega_s t, \tag{4.1.56}$$

* See, for example, C. Concordia, *Synchronous Machines*, Wiley, New York, 1951.

† See, for example, White and Woodson, *op. cit.*, Chapter 9.

with the rotor circuits short-circuited

$$v_{ar} = v_{br} = 0, \tag{4.1.57}$$

and with the rotor constrained by the position source

$$\theta = \omega_m t + \gamma. \tag{4.1.58}$$

The terminal relations for the electromechanical coupling system are (4.1.19) to (4.1.23).

In the analysis that follows we neglect the resistance of the stator windings. This is standard practice when analyzing the energy conversion properties of a large induction machine. The primary effect of stator winding resistance is in heating the machine, and it therefore plays a major role in determining the machine's rating. For reasons that will become clear subsequently, we must retain the resistance of the rotor circuits in our analysis.

With the terminal constraints of (4.1.55) to (4.1.58) and with rotor circuit resistance denoted by R_r, we write the differential equations for the two rotor circuits:

$$0 = R_r i_{ar} + L_r \frac{di_{ar}}{dt} + MI_s \frac{d}{dt} [\cos \omega_s t \cos (\omega_m t + \gamma) + \sin \omega_s t \sin (\omega_m t + \gamma)] \tag{4.1.59}$$

$$0 = R_r i_{br} + L_r \frac{di_{br}}{dt} + MI_s \frac{d}{dt} [-\cos \omega_s t \sin (\omega_m t + \gamma) + \sin \omega_s t \cos (\omega_m t + \gamma)]. \tag{4.1.60}$$

The use of appropriate trigonometric identities* allows us to rewrite these equations in the forms

$$MI_s(\omega_s - \omega_m) \sin [(\omega_s - \omega_m)t - \gamma] = L_r \frac{di_{ar}}{dt} + R_r i_{ar}, \tag{4.1.61}$$

$$-MI_s(\omega_s - \omega_m) \cos [(\omega_s - \omega_m)t - \gamma] = L_r \frac{di_{br}}{dt} + R_r i_{br}. \tag{4.1.62}$$

The right sides are identical, linear, first-order differential operators with constant coefficients. The left sides are sinusoidal voltage drives of equal amplitudes, but 90 degrees phase difference (just like the stator currents). Thus we need to consider only one of these equations for a solution.

As indicated by (4.1.61) and (4.1.62), both rotor currents will have frequency $(\omega_s - \omega_m)$ which exactly satisfies the condition of (4.1.30). Thus the induction machine satisfies the condition for average power conversion at all mechanical speeds. With finite rotor resistance an induction machine can

* $\cos (x - y) = \cos x \cos y + \sin x \sin y$, $\sin (x - y) = \sin x \cos y - \cos x \sin y$.

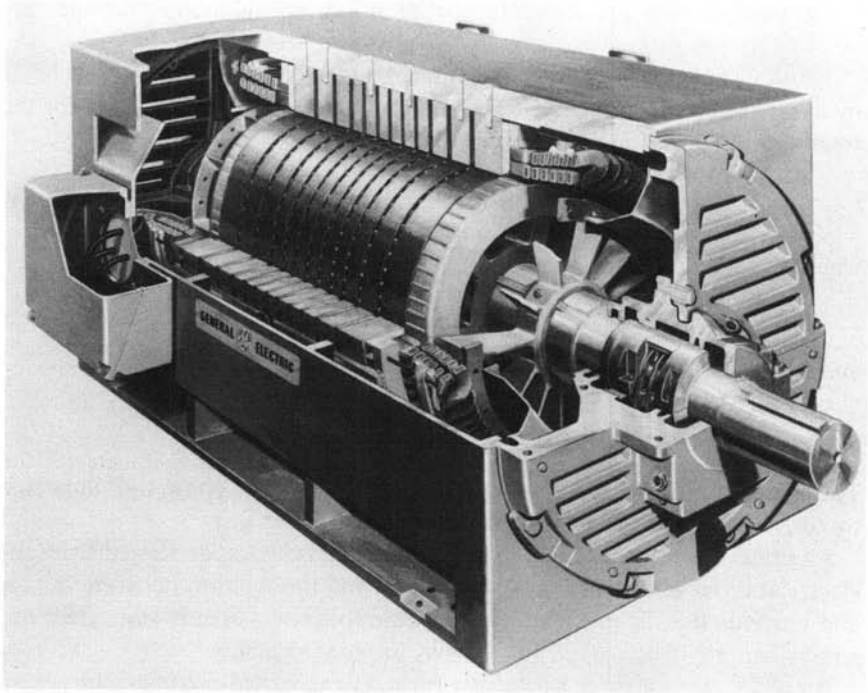

Fig. 4.1.16 Cutaway view of a squirrel-cage induction motor. (Courtesy of General Electric Company.)

Courtesy of General Electric Company. Used with permission.

convert average power at all speeds except synchronous ($\omega_m = \omega_s$), and its mode of operation (motor, generator, or brake) depends on the relative values of ω_m and ω_s, as we shall see subsequently.

An induction motor can also be obtained by exciting the rotor with ac and short-circuiting the stator circuits. This, however, requires that all the power be fed into the machine through sliding electrical contacts (brushes on slip rings), which is impractical in most cases in the light of the simple alternative.

Most induction machines have squirrel-cage rotors in which bare conductors are imbedded in slots in the rotor iron and are then all short-circuited together at the ends by conducting rings. A cutaway view of such a motor is shown in Fig. 4.1.16. The conductor assembly alone looks like a cage, hence the name. Some special-purpose induction machines have rotor circuits wound with insulated conductors with connections to the terminals made through brushes and slip rings. The rotor for a wound rotor induction machine was shown earlier in Fig. 4.1.3. Having access to the rotor circuits allows us to connect different sources, or loads, or to short circuit the rotor circuits externally and thereby obtain a variety of machine characteristics.

For reasons that are stated in Section 4.2.2, all induction machines are smooth-air-gap machines.

We shall now study the steady-state characteristics of induction machines by using the constraints of (4.1.55) to (4.1.58). We first solve (4.1.61) for the steady-state current in rotor circuit (a)*:

$$i_{ar} = \frac{(\omega_s - \omega_m)MI_s}{\sqrt{R_r^2 + (\omega_s - \omega_m)^2 L_r^2}} \cos\left[(\omega_s - \omega_m)t + \alpha\right], \tag{4.1.63}$$

where

$$\alpha = -\frac{\pi}{2} - \gamma - \beta$$

and

$$\beta = \tan^{-1} \frac{(\omega_s - \omega_m)L_r}{R_r}.$$

The current in rotor circuit b is identical except for a 90° phase shift indicated by (4.1.62) [The cos in (4.1.63) is replaced by sin for i_{br}.]

As usual, we want to know how the machine behaves, as viewed from the electrical input terminals; thus we wish to find the relation between voltage and current. It is helpful at the same time to draw a steady-state electrical equivalent circuit as we did for the synchronous machine.

It can be verified quite easily that for a balanced two-phase machine with balanced two-phase excitation, as we have here, we need to consider only one phase (stator circuit) because the behavior of the other circuit will be identical except for a 90° phase shift.

We use (4.1.19) with the definition of terminal voltage to write

$$v_{as} = \frac{d\lambda_{as}}{dt} = \frac{d}{dt}(L_s i_{as}) + \frac{d}{dt}(M i_{ar} \cos\theta - M i_{br} \sin\theta). \tag{4.1.64}$$

Substitution from (4.1.55), (4.1.58), and (4.1.63) into this expression yields

$$\begin{aligned} v_{as} = \frac{d}{dt}(L_s I_s \cos\omega_s t) &+ \frac{d}{dt}\frac{(\omega_s - \omega_m)M^2 I_s}{\sqrt{R_r^2 + (\omega_s - \omega_m)^2 L_r^2}} \\ &\times \{\cos\left[(\omega_s - \omega_m)t + \alpha\right]\cos(\omega_m t + \gamma) \\ &\quad - \sin\left[(\omega_s - \omega_m)t + \alpha\right]\sin(\omega_m t + \gamma)\}. \end{aligned} \tag{4.1.65}$$

A trigonometric identity is used to simplify the second term; thus

$$v_{as} = \frac{d}{dt}(L_s I_s \cos\omega_s t) + \frac{d}{dt}\left[\frac{(\omega_s - \omega_m)M^2 I_s}{\sqrt{R_r^2 + (\omega_s - \omega_m)^2 L_r^2}} \cos\left(\omega_s t - \beta - \frac{\pi}{2}\right)\right]. \tag{4.1.66}$$

* A review of sinusoidal steady-state circuit analysis is given in Section 5.1.

It is now convenient to define the *slip* s as

$$s = \frac{\omega_s - \omega_m}{\omega_s}. \tag{4.1.67}$$

The slip is a measure of the difference between the actual mechanical speed (ω_m) and the synchronous speed (ω_s) expressed as a fraction of synchronous speed. When the mechanical speed is less than the synchronous speed, the slip is positive.

We now use the definition of slip s to rewrite (4.1.66) in the form

$$v_{as} = \frac{d}{dt}(L_s I_s \cos \omega_s t) + \frac{d}{dt}\left[\frac{\omega_s M^2 I_s}{\sqrt{(R_r/s)^2 + \omega_s^2 L_r^2}} \cos\left(\omega_s t - \beta - \frac{\pi}{2}\right)\right], \tag{4.1.68}$$

and we rewrite the definition of β in terms of slip s as

$$\beta = \tan^{-1} \frac{\omega_s L_r}{R_r/s}. \tag{4.1.69}$$

We now use complex notation by defining

$$i_{as} = \mathrm{Re}\,(I_s e^{j\omega_s t}), \qquad \cos\left(\omega_s t - \beta - \frac{\pi}{2}\right) = \mathrm{Re}\,(-je^{j\omega_s t}e^{-j\beta}),$$

$$v_{as} = \mathrm{Re}\,(\hat{V}_s e^{j\omega_s t}),$$

and rewrite (4.1.68) as

$$\hat{V}_s = j\omega_s L_s I_s + \frac{\omega_s^2 M^2 I_s e^{-j\beta}}{\sqrt{(R_r/s)^2 + \omega_s^2 L_r^2}}. \tag{4.1.70}$$

This equation is conventionally represented by the steady-state equivalent circuit of Fig. 4.1.17 in which we have indicated a complex amplitude $\hat{I}_r$ that can be verified from the circuit to have the value

$$\hat{I}_r = \frac{-j\omega_s M I_s e^{-j\beta}}{\sqrt{(R_r/s)^2 + \omega_s^2 L_r^2}}. \tag{4.1.71}$$

Thus the second term in (4.1.70) is simply $j\omega_s M \hat{I}_r$ as it should be for the circuit in Fig. 4.1.17.

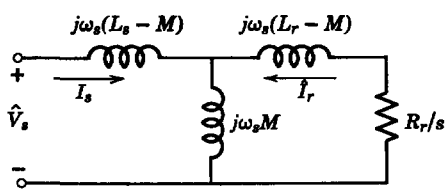

Fig. 4.1.17 Steady-state equivalent circuit for balanced two-phase induction machine with balanced excitation.

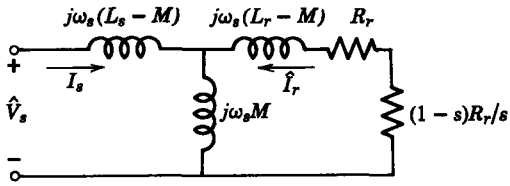

Fig. 4.1.18 Alternative form for steady-state equivalent circuit for balanced two-phase induction machine with balanced excitation. Here the resistance $(1 - s)R_r/s$ gives rise to a power dissipation equal to the power converted to mechanical form.

By some simple manipulations it can be verified that the magnitude of $\hat{I}_r$ is the same as the magnitude of i_{ar} found in (4.1.63). The effect of the relative motion has been to change the frequency but not the magnitude of the rotor current as viewed from the stator winding and indicated in (4.1.64) and (4.1.66). Consequently, when the equivalent circuit of Fig. 4.1.17 is redrawn as in Fig. 4.1.18, the power loss calculated in R_r is the actual I^2R loss in one winding of the rotor. The power into the other resistance $(1 - s)R_r/s$ represents power converted to mechanical form, as will be demonstrated.

The equivalent circuit of Fig. 4.1.17 or 4.1.18 can be used to study the steady-state electrical behavior of induction machines. Our use of i_{as} as having zero phase angle can be relaxed and I_s can be replaced by a complex amplitude. The equivalent circuit serves the important function of helping to determine the correct relative phase angles.

The b winding on the stator will behave like the a winding except for a 90° phase shift in all variables, as indicated by the excitations (4.1.55) and (4.1.56). This can be verified quite easily and is not done here.

To describe the behavior of the induction machine, as viewed from the mechanical terminal pair, we use (4.1.23) with (4.1.55), (4.1.56), (4.1.63) and the value of i_{br}, obtained by replacing the cosine in (4.1.63) with a sine, and obtain the expression for the torque

$$\begin{aligned} T^e = {} & \frac{(\omega_s - \omega_m)M^2 I_s^{\,2}}{\sqrt{R_r^{\,2} + (\omega_s - \omega_m)^2 L_r^{\,2}}} \\ & \times [\{\cos[(\omega_s - \omega_m)t + \alpha] \sin \omega_s t - \sin[(\omega_s - \omega_m)t + \alpha] \cos \omega_s t\} \\ & \times \cos(\omega_m t + \gamma) - \{\cos[(\omega_s - \omega_m)t + \alpha] \cos \omega_s t \\ & \quad + \sin[(\omega_s - \omega_m)t + \alpha] \sin \omega_s t\} \sin(\omega_m t + \gamma)]. \end{aligned} \tag{4.1.72}$$

The successive use of trigonometric identities* and the definition of angle β in (4.1.63) lead to the simplified result

$$T^e = \frac{(\omega_s - \omega_m)M^2 R_r I_s^{\,2}}{R_r^{\,2} + (\omega_s - \omega_m)^2 L_r^{\,2}}. \tag{4.1.73}$$

* $\cos(x - y) = \cos x \cos y + \sin x \sin y$, $\sin(x - y) = \sin x \cos y - \cos x \sin y$.

The instantaneous torque T^e is constant. This is to be expected because balanced two-phase currents yield constant-amplitude rotating fields, as discussed in Section 4.1.4, and the interaction of these fields when the condition of (4.1.30) is satisfied produces a steady torque.

The mechanical power output of the machine is

$$p_m = \omega_m T^e = \left[\frac{\omega_s^2 M^2 I_s^2}{(R_r/s)^2 + \omega_s^2 L_r^2}\right]\left(\frac{1-s}{s}\right)R_r \tag{4.1.74}$$

where we have used the definition of slip s in (4.1.67) and manipulated the result to get this form. Note that the term in brackets is the square of the magnitude of $\hat{I}_r$, as given in (4.1.71); thus we have verified that the power absorbed by the resistance $(1-s)R_r/s$ in Fig. 4.1.18 is indeed the power converted to mechanical form when multiplied by two to account for both phases.

The total power input to the stator windings (excluding stator I^2R losses, which we have done) is defined as the *air-gap power* p_g. It is clear from Fig. 4.1.17 that

$$p_g = I_r^2 \frac{R_r}{s}, \tag{4.1.75}$$

where I_r is the magnitude of $\hat{I}_r$ given by (4.1.71) and (4.1.75) is twice the power input to one phase. As already indicated, the rotor I^2R losses p_r are given by

$$p_r = I_r^2 R_r = s p_g. \tag{4.1.76}$$

The power p_m converted to mechanical form is

$$p_m = I_r^2\left(\frac{1-s}{s}\right)R_r = (1-s)p_g. \tag{4.1.77}$$

Thus the power into the stator equals the sum of rotor losses and converted power

$$p_g = p_r + p_m \tag{4.1.78}$$

and there is no rate of change of total energy stored in the machine. We knew this all the time, because for balanced excitation the air-gap magnetic fields have constant amplitudes.

We now use (4.1.75) to (4.1.78) to identify the three possible modes of operation of an induction machine as illustrated in Fig. 4.1.19. The arrow heads indicate the flow direction of power and the ranges of slip and speed are given in the figure. Note in particular that the rotor power p_r is always greater than zero as it must be because it is an I^2R loss. Note also that brake operation has power coming into the machine from both electrical and mechanical terminal pairs and all of this power is dissipated in the rotor resistance.

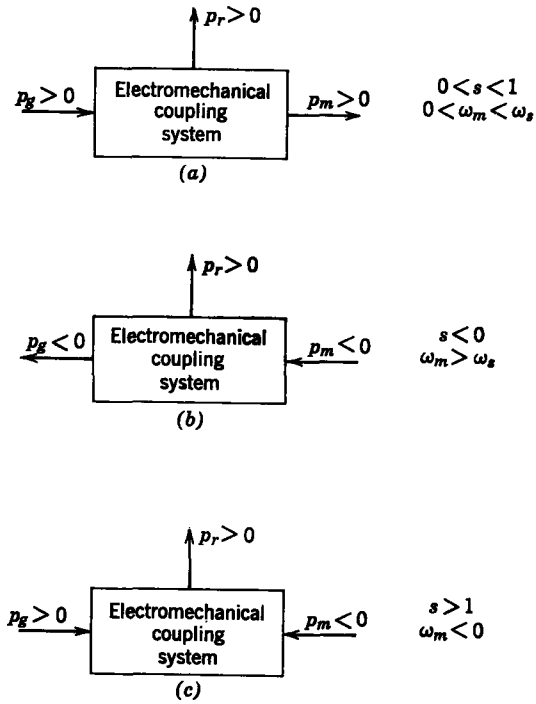

Fig. 4.1.19 The three modes of operation of an induction machine: (*a*) motor operation; (*b*) generator operation; (*c*) brake operation.

When operating as a motor, the machine efficiency η is defined as the mechanical power output divided by the electrical power input to the stator; thus

$$\eta = \frac{p_m}{p_g} = 1 - s. \tag{4.1.79}$$

As a consequence, large induction machines intended for the efficient production of mechanical power are designed to run at as small a slip (as close to synchronous speed) as possible.

Induction machines are normally excited by almost constant voltage sources. Consequently, the electromechanical coupling properties are of most interest for this condition and we need to express (4.1.73) in terms of the magnitude V_s of the terminal voltage $\hat{V}_s$. We use (4.1.70) to write

$$\hat{V}_s = j\omega_s L_s I_s + \frac{\omega_s{}^2 M^2 I_s (R_r/s)}{(R_r/s)^2 + \omega_s{}^2 L_r{}^2} - j\frac{\omega_s{}^3 M^2 L_r I_s}{(R_r/s)^2 + \omega_s{}^2 L_r{}^2}. \tag{4.1.80}$$

In obtaining this form we have used the definitions of angle β from (4.1.63)

and slip s from (4.1.67). The magnitude squared of $\hat{V}_s$ is then

$$V_s^2 = \left\{\left[\omega_s L_s - \frac{\omega_s^3 M^2 L_r}{(R_r/s)^2 + \omega_s^2 L_r^2}\right]^2 + \left[\frac{\omega_s^2 M^2 (R_r/s)}{(R_r/s)^2 + \omega_s^2 L_r^2}\right]^2\right\} I_s^2. \quad (4.1.81)$$

Solution of this equation for I_s^2, substitution of that result in (4.1.73) and simplification lead to the result

$$T^e = \frac{(k^2/\omega_s)(L_r/L_s)(R_r/s)V_s^2}{[\omega_s(1 - k^2)L_r]^2 + (R_r/s)^2}. \quad (4.1.82)$$

We have used the square of the maximum coefficient of coupling

$$k^2 = \frac{M^2}{L_r L_s} \quad (4.1.83)$$

to simplify this expression. Note that this is the coefficient of coupling between the a windings on stator and rotor when rotor position θ is zero.

A curve of electromagnetic torque versus slip (and mechanical speed) typical of large squirrel-cage induction machines is shown in Fig. 4.1.20. The ranges over which the machine operates as a motor, generator, and brake are also indicated.

The torque given by (4.1.82) depends on rotor resistance R_r and slip s only through the ratio R_r/s. By differentiating (4.1.82) with respect to this ratio, setting the derivative equal to zero, and solving for the ratio we can determine that the torque has two maxima that occur when

$$\frac{R_r}{s} = \pm\omega_s(1 - k^2)L_r, \quad (4.1.84)$$

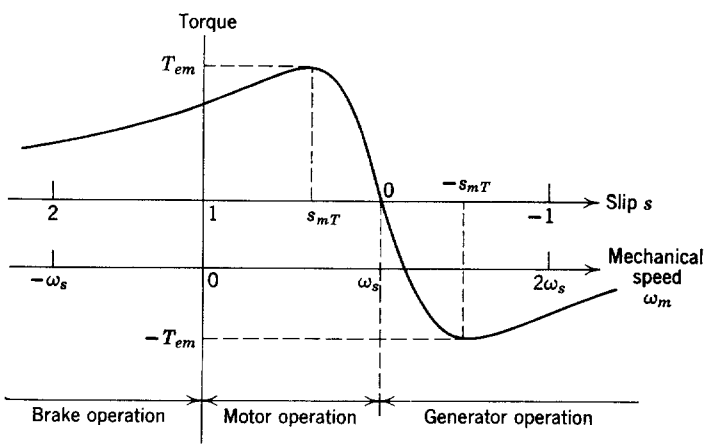

Fig. 4.1.20 Torque-slip curve of a two-phase induction machine with balanced excitation.

from which the slip at which maximum torque occurs is

$$s = \pm s_{mT} = \pm \frac{R_r}{\omega_s(1 - k^2)L_r}. \tag{4.1.85}$$

These two values of slip are indicated in Fig. 4.1.20. Substitution of (4.1.84) into (4.1.82) yields for the maximum torque

$$T^e = \pm T_{em} = \pm \frac{k^2 V_s^2}{2\omega_s^2 L_s(1 - k^2)}. \tag{4.1.86}$$

This maximum torque is indicated in Fig. 4.1.20.

The maximum torque given by (4.1.86) is independent of rotor resistance R_r. Thus for a wound rotor induction motor with which the rotor resistance can be set to any desired value we can get a set of steady-state torque-speed curves as sketched in Fig. 4.1.21. Note that as R_r increases the speed at which maximum torque occurs decreases but the maximum torque stays the same. This fact is often used by introducing external resistance into the rotor circuit to achieve a high starting torque and then short-circuiting the rotor windings for normal running to get a small slip and therefore high efficiency.

The loading of an induction motor normally occurs in the region of negative slope near synchronous speed; for example, the torque-speed curve of an induction motor and a typical load (e.g., a fan) are shown in Fig. 4.1.22. The steady-state operating point of the system is indicated on the curves. If the fan load increases to the dashed curve, the new operating point occurs at a higher torque, lower speed, and higher slip. At the higher slip the motor produces more mechanical power but with less efficiency.

It is worthwhile to understand the reasons for the shape of the torque speed curve of an induction motor. First, in the normal operating range, which is the region of negative slope near synchronous speed in Fig. 4.1.20, the slip is

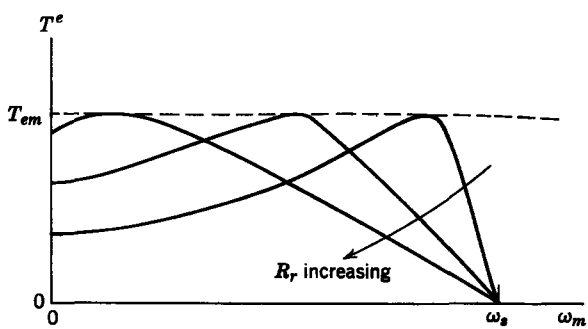

Fig. 4.1.21 Variation of torque-speed curves of induction motor with rotor resistance. Stator voltage held constant.

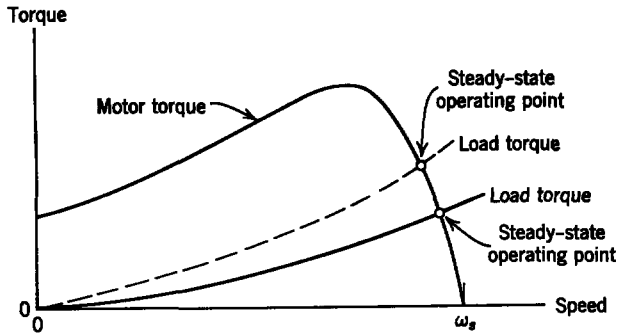

Fig. 4.1.22 Loading of an induction motor.

very small, hence the induced currents in the rotor are at very low frequency [see (4.1.63)]. Under this condition the resistance of the rotor windings has a much greater effect than the inductance. To express this mathematically, the resistive term in the denominator of (4.1.82) dominates such that

$$\left(\frac{R_r}{s}\right)^2 \gg [\omega_s(1 - k^2)L_r]^2$$

and the torque becomes

$$T^e \approx \frac{k^2}{\omega_s}\frac{L_r}{L_s}\frac{s}{R_r}V_s^2. \tag{4.1.87}$$

This torque is a linear function of slip and therefore also of mechanical speed.

When the mechanical speed is far from synchronous speed (the slip is large), the frequency of the rotor currents (4.1.63) is high and inductance predominates over resistance. This region is defined from the denominator of (4.1.82) as the condition

$$[\omega_s(1 - k^2)L_r]^2 \gg \left(\frac{R_r}{s}\right)^2.$$

In this case the torque becomes

$$T^e \approx \frac{k^2}{\omega_s^3(1 - k^2)^2 L_r L_s}\frac{R_r}{s}V_s^2. \tag{4.1.88}$$

This expression varies inversely with slip.

The two asymptotes are sketched in Fig. 4.1.23 for positive slip. These two simplified models are useful for studying the behavior of the machine under particular conditions; for example, for the kind of torque-speed curve shown in Fig. 4.1.23, which is typical of large induction motors, the inductance-dominated model (4.1.88) is sufficient for starting conditions and the resistance-dominated model is adequate for normal running conditions. We have more to say about these kinds of approximations in the next chapter.

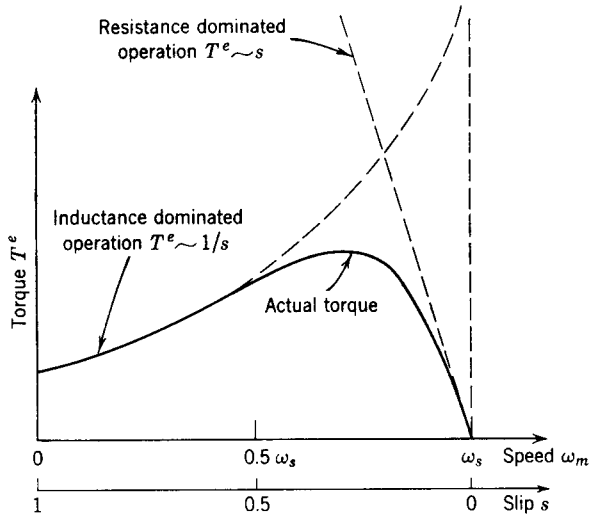

Fig. 4.1.23 Asymptotic behavior of an induction motor.

Our analysis of induction machines has been done with a two-phase model. Most large induction machines are actually excited by three-phase sources. Nonetheless, the standard technique for analysis is to transform a three-phase machine to an equivalent two-phase machine for a study of the energy conversion properties. This is true for any number of phases.* Consequently, our treatment is general and our conclusions are valid for all balanced polyphase machines with balanced polyphase excitation.

We have only highlighted the properties of polyphase induction machines with the idea of trying to establish some insight into the physical processes occurring. The subject of induction machines is complex and extensive enough to be the sole subject of books.†

All of our discussion so far has been relevant to polyphase induction machines. There are also single-phase induction machines which have some unique characteristics. A single-phase induction machine is constructed like the machine illustrated in Fig. 4.1.1. The stator is excited by a single-phase source and the rotor winding is short-circuited. (Actually, the rotor is almost always of squirrel-cage construction and therefore the equivalent of two windings, 90° apart in space.)

As we discovered in Section 4.1.4, single-phase excitation of a symmetrically distributed winding produces two equal-amplitude waves of flux density traveling in opposite directions in the air gap. A squirrel-cage rotor in this

* See, for example, White and Woodson, *op. cit.*, Chapter 8.

† See, for example, P. L. Alger, *The Nature of Polyphase Induction Machines*, Wiley, New York, 1951.

environment does not know which way to go and therefore will not start to rotate. Once started, however, the rotor will continue to run in the same direction. The torque-speed curve of a single-phase induction motor can be derived as the superposition of two machines operating with the traveling components of the air-gap flux, as illustrated in Fig. 4.1.24. Thus, with rotation in either direction, the flux wave traveling in that direction dominates and the machine continues to run in that direction. In the normal running range near synchronous speed the single-phase induction motor has properties similar to those of polyphase machines.

In view of the single-phase machine properties illustrated in Fig. 4.1.24, there is a problem in starting the machine. There is a variety of starting methods.* For moderate-size machines ($\frac{1}{10}$ to 5 hp, approximately) of the type installed in refrigerators, air conditioners, washing machines, and the like, an auxiliary winding is used. The auxiliary winding is wound with its magnetic axis displaced 90 degrees from that of the main winding. It is also excited from the single-phase source, but the phase angle of its current is different from that of the main winding, either because of a different L/R ratio or because a capacitor is added in series. This different phase angle of the current in the auxiliary winding causes an unbalance between the two rotating field waves; one of the waves dominates and starts the rotor turning. In most cases the auxiliary winding is disconnected by a centrifugal switch when the rotor reaches a predetermined speed during the acceleration.

For smaller, single-phase induction machines starting torque is provided by shading coils,† which are short-circuited turns on the stator that give the effect of making one flux wave dominate the other.

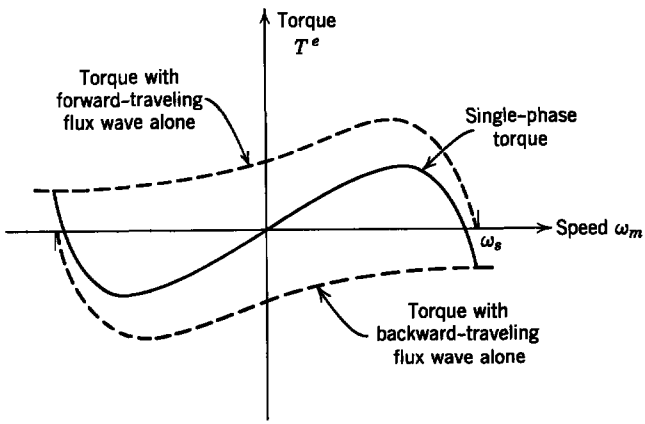

Fig. 4.1.24 The torque-speed curve of a single-phase induction motor.

* See, for example, Fitzgerald and Kingsley, *op. cit.*, Chapter 11.
† See, for example, Fitzgerald and Kingsley, *loc. cit.*

Because of the simple, rugged construction possible with a squirrel-cage rotor, the induction motor is the least expensive and most reliable means of converting electric energy to mechanical energy. As a result, induction motors are more numerous by far than any other type of motor.

Another important class of induction motor is the *two-phase servomotor*, which is essentially a two-phase induction motor with rotor resistance sufficiently high that maximum torque occurs at a slip of around 1.5 (see Fig. 4.1.21). The torque-speed curve then has a negative slope for all positive speeds and can therefore run stably at any speed between zero and synchronous speed. Such a motor is normally operated with full voltage applied to one winding and with variable voltage applied to the other to get smooth control of speed. Such operation is quite inefficient and thus servomotors are made in small sizes, mostly up to 20 W but sometimes up to 1000 W with auxiliary cooling for the rotors. They are, as their name implies, used mostly in servo systems for control applications. The analysis of servomotors is a straightforward application of the techniques we have introduced and is done quite well elsewhere.* Thus we do not discuss them further here.

4.1.6c Commutator Machines

The most widely used machine for control purposes is the *dc machine* which uses (or supplies) electrical power at zero frequency. It is evident from (4.1.18) that with zero-frequency rotor and stator currents it is impossible to satisfy the frequency condition with any nonzero mechanical speed. This problem is circumvented by the use of a *commutator* which can be viewed as a mechanical frequency changer. The stator circuit (field circuit) of the usual dc machine is excited by direct current and the rotor (armature) circuits are fed from direct-current sources through a commutator that provides the currents in the rotor conductors with components at ω_m. This frequency, with the zero stator-current frequency, satisfies the condition in (4.1.18) at all mechanical speeds.

A commutator is a mechanical switch whose state is determined by the rotor position θ. The simplest possible commutator is shown schematically for one rotor coil without the iron in Fig. 4.1.25*a*. When a constant current I is passed through the external terminals and the rotor carrying the coil and commutator is rotated about its axis with a mechanical velocity ω_m, the waveform of the current in the coil is as shown in Fig. 4.1.25*b*. It is clear from this waveform that the fundamental frequency of the coil current is ω_m, as stated above.

In practical machines commutators are made with many segments, and the many coils on the rotor are connected to one another and to the commutator

* See, for example, G. J. Thaler and M. L. Wilcox, *Electric Machines*, Wiley, New York, 1966, pp. 208–213.

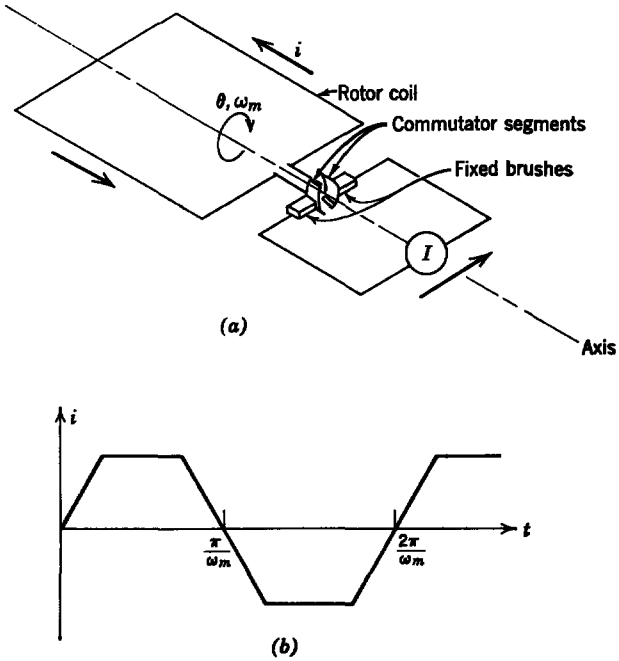

Fig. 4.1.25 Schematic representation of a simple commutator: (*a*) the physical arrangement; (*b*) coil current.

in one of two ways to obtain maximum utilization of the copper coils.* A dc machine rotor is shown in Fig. 4.1.26, and Fig. 4.1.27 illustrates how brushes are mounted to make contact with the commutator in a dc machine.

In spite of the apparent complications, the commutator can still be viewed as a mechanical frequency changer that is necessary to satisfy the frequency condition for average power conversion (4.1.18) when the electrical sources (or sinks) are at zero frequency (dc).

A variety of dc machine characteristics is possible, depending on whether the field (stator) circuit and the armature (rotor) circuit are connected in series, in parallel, or are excited separately (see Section 6.4.1).

The commutator has been described as having dc excitation, but it also acts as a frequency changer when alternating currents are fed into the brushes, the change in frequency being equal to the rotational speed of the commutator. Thus, if currents at frequency ω are fed into the stator circuits and into the rotor coils through a commutator, the rotor currents will contain components at frequency $\omega - \omega_m$ and the frequency condition of (4.1.18) is automatically satisfied at all mechanical speeds. This result gives rise to

* For details see Knowlton, *op. cit.*, Section 8.

Fig. 4.1.26 A dc machine rotor (armature). Note the large number of slots and commutator bars. (Courtesy of Westinghouse Electric Corporation.)

many varieties of *ac commutator* machines*; the most common of which are used to drive vacuum cleaners, hand drills, electric egg beaters, and so forth.

Although we could develop the equations of motion and study the steady-state properties of commutator machines as we have done for synchronous and induction machines, it is more appropriate and meaningful to do so after we have developed some field theory for moving media. Thus we defer this treatment until we reach Chapter 6, Section 6.4.

4.1.7 Polyphase Machines

In our discussions so far machines have been considered with single-phase windings (Fig. 4.1.1) and two-phase windings (Fig. 4.1.7). In this section the definitions and configurations are given for machines with any number of phases, hence the name *polyphase*.

Polyphase electric power is generated and used for several reasons. It is economically optimum to generate and distribute three-phase power; the use

* For more detail see Knowlton, *op. cit.*, Section 7.

of polyphase power allows the operation of rotating machines to produce steady torque, even though the excitation is ac (see Section 4.1.3), and a polyphase machine for a particular application is smaller (and therefore less expensive) than a single-phase machine.

A set of balanced polyphase currents (or voltages) consists of a number of currents (or voltages) equal to the number of phases, each member of the set having the same amplitude and all members of the set being equally spaced in time phase; for example, a balanced set of three-phase currents (labeled by subscripts as phases a, b, and c) is specified as

$$\begin{aligned} i_a &= I \cos \omega t, \\ i_b &= I \cos \left(\omega t - \frac{2\pi}{3}\right), \\ i_c &= I \cos \left(\omega t - \frac{4\pi}{3}\right), \end{aligned} \tag{4.1.89}$$

where I is the amplitude and $2\pi/3$ is the phase difference between any two phases.

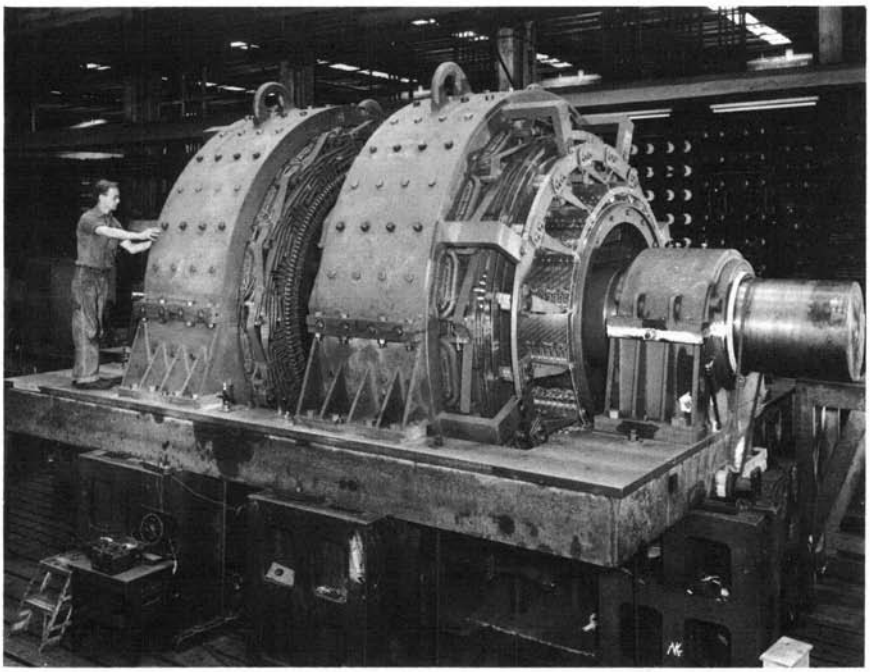

Fig. 4.1.27 A dc machine. Note how the brush rigging is assembled to hold the brushes in contact with the commutator. Note also the salient poles on the stator. (Courtesy of Westinghouse Electric Corporation.)

It is easy to extend this system to an arbitrary number of phases. Suppose there are n phases. Then a balanced set of voltages is written as

$$\begin{aligned} v_1 &= V\cos\omega t \\ v_2 &= V\cos\left(\omega t - \frac{2\pi}{n}\right) \\ v_3 &= V\cos\left(\omega t - \frac{4\pi}{n}\right) \\ &\cdot \\ &\cdot \\ &\cdot \\ v_n &= V\cos\left[\omega t - \frac{(n-1)2\pi}{n}\right]. \end{aligned} \tag{4.1.90}$$

In these expressions V is the amplitude and the phase difference between any two adjacent phases is $(2\pi/n)$ rad.

In terms of this general scheme, a two-phase system like that in (4.1.24) and (4.1.25) is the special case of half a four-phase system. A four-phase set of currents is written as

$$\begin{aligned} i_a &= I\cos\omega t, \\ i_b &= I\cos\left(\omega t - \frac{\pi}{2}\right), \\ i_c &= I\cos(\omega t - \pi), \\ i_d &= I\cos\left(\omega t - \frac{3\pi}{2}\right). \end{aligned} \tag{4.1.91}$$

A selection of the first two or the last two of this set will yield a set of two-phase currents with the same relative phase ($\pi/2$ rad) as that in (4.1.24) and (4.1.25).

Any set of phases will have a *phase sequence* defined as the order in which the phase variables reach a positive maximum (or any other convenient reference value). Thus the sequence of the three-phase system of (4.1.89) is a to b to c which is usually defined as *positive sequence*. A three-phase set with *negative sequence* (c to b to a) is

$$\begin{aligned} i_a &= I\cos\omega t, \\ i_b &= I\cos\left(\omega t + \frac{2\pi}{3}\right), \\ i_c &= I\cos\left(\omega t + \frac{4\pi}{3}\right). \end{aligned} \tag{4.1.92}$$

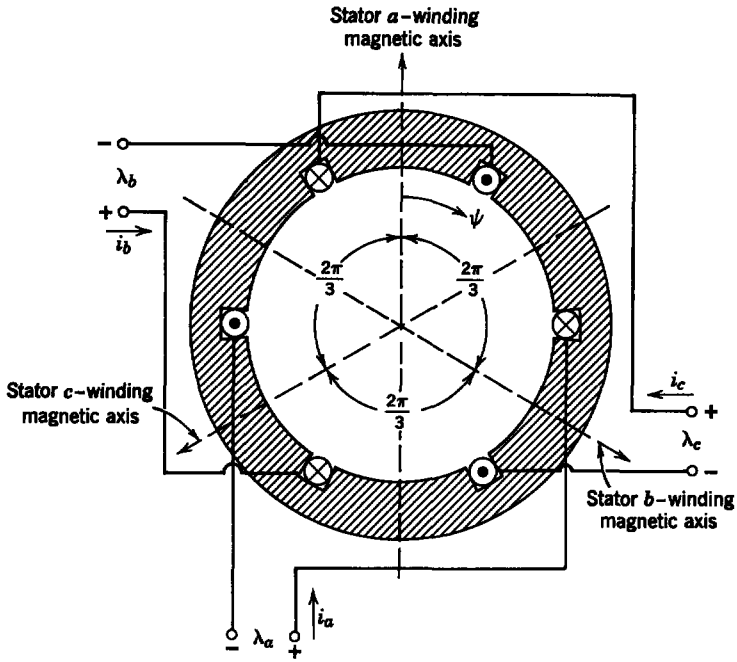

Fig. 4.1.28 A three-phase stator.

Note that the n-phase set of voltages of (4.1.90) and the four-phase set of currents in (4.1.91) are both positive sequence.

Now suppose that a rotating machine is to have its stator wound so that with balanced polyphase currents in its windings the rotating field due to stator currents will have constant amplitude and will rotate at constant speed around the periphery of the air gap. Such a system has already been discussed for a two-phase machine in Section 4.1.4. From that discussion it is clear that the number of windings must equal the number of phases and that the winding magnetic axes must be placed around the periphery in the same relative space positions that the currents are placed in relative time phase.

To illustrate this consider the three-phase windings on the stator of Fig. 4.1.28 in which the rotor is omitted for simplicity and the windings are shown lumped in single slots, although they would be distributed in an actual machine. When the positive-sequence, three-phase currents of (4.1.89) are applied to this machine, a field analysis similar to that of Section 4.1.4 will show that the air-gap flux density distribution will have constant amplitude and will rotate in the positive ψ-direction with the angular speed ω. Excitation of the stator of Fig. 4.1.28 with the negative sequence currents of (4.1.92) yields a constant-amplitude field pattern rotating in the negative ψ-direction with the angular speed ω.

This discussion, in which the example of a stator was used, applies equally well to a rotor. The general case is presented elsewhere.*

A machine can operate successfully with any number of phases on the stator and the same or any other number of phases on the rotor; for instance, a three-phase alternator (a synchronous machine used to generate electric power) usually has a three-phase stator (armature) winding and a single rotor (field) winding.

4.1.8 Number of Poles in a Machine

The number of poles in a machine is defined by the configuration of the magnetic field pattern that occurs; for example, consider the rotor of Fig. 4.1.29*a* with a single winding. When the instantaneous current is in the direction indicated by the dots and crosses, the resulting **B** field is as sketched in the figure. With the **B** field as shown, the rotor can be viewed as an electromagnet with north (N) and south (S) poles as indicated. In a trip around its periphery two poles are passed; therefore it is a two-pole rotor.

Consider now the rotor of Fig. 4.1.29*b* which has four slots carrying coils connected in series with the polarities indicated by dots and crosses. Once again this winding can be single-phase or it can be one phase of a polyphase winding. When the instantaneous winding current has the direction indicated, the resulting **B** field is as sketched in Fig. 4.1.29*b* and the rotor is effectively a four-pole electromagnet.

These ideas can be generalized to an arbitrary number of poles by stating

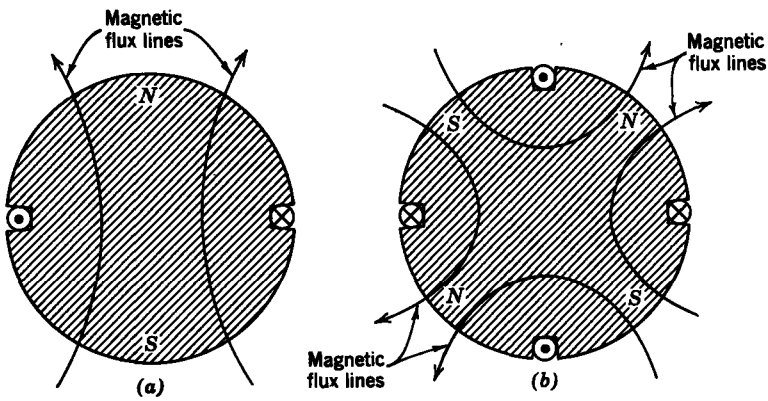

Fig. 4.1.29 Definition of number of poles in a machine: (*a*) two-pole rotor; (*b*) four-pole rotor.

* White and Woodson, *op. cit.*, Chapter 10.

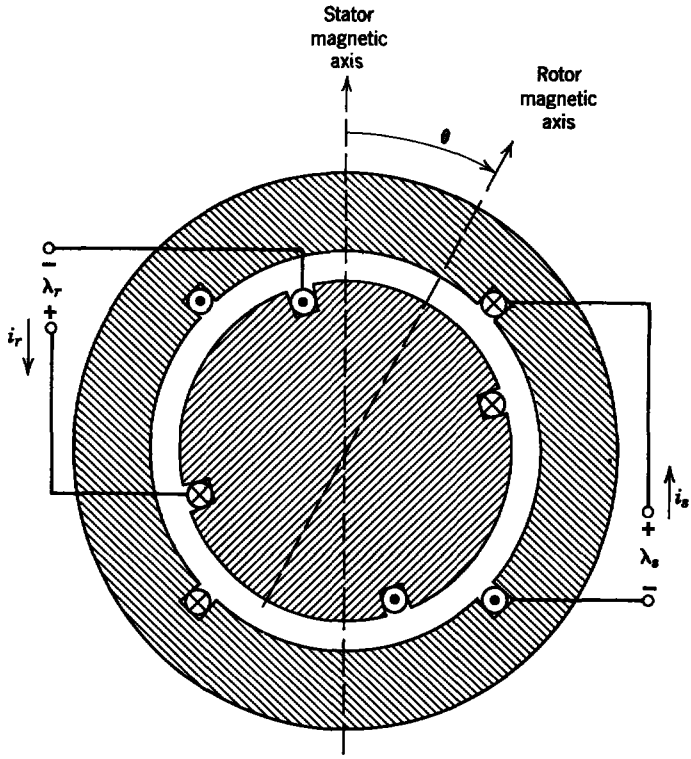

Fig. 4.1.30 Four-pole, single-phase machine.

that with current in one phase the number of poles (north and south) encountered in one turn around the periphery of the air gap defines the number of poles. It is clear that poles occur in pairs.

This discussion of the number of poles on a rotor applies equally well to stators.

Re-examination of the examples of earlier sections shows that they all concern two-pole machines. Some of those ideas are considered here for machines with more than two poles.

Consider the four-pole, single-phase machine illustrated in Fig. 4.1.30. The interconnections are not shown but current i_s is in all the stator coils in the directions shown and current i_r is in all the rotor coils in the directions shown. The slots are assumed to have negligible effects on the self-inductances (this is a smooth-air-gap machine) so that the self-inductances will be independent of rotor position θ. Because of the symmetries involved (see discussion in Section 4.1.1), the mutual inductance can be expressed as

$$L_{sr}(\theta) = M_1 \cos 2\theta + M_3 \cos 6\theta + M_5 \cos 10\theta + \cdots. \quad (4.1.93)$$

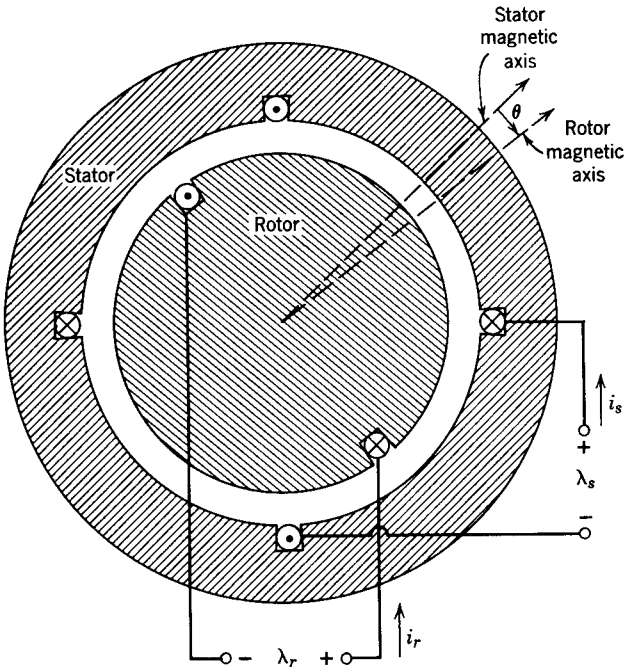

Fig. 4.1.31 Machine with four-pole stator and two-pole rotor. This configuration can produce no torque.

Compare this expression with (4.1.4). It can be generalized immediately by recognizing that for a p-pole-pair machine the mutual inductance between a stator winding and a rotor winding is expressible as

$$L_{sr}(\theta) = M_1 \cos p\theta + M_3 \cos 3p\theta + M_5 \cos 5p\theta + \cdots. \quad (4.1.94)$$

To minimize the generation of harmonics multipole ac machines are designed to accentuate the lowest space harmonic of L_{sr} and to decrease as much as possible the higher space harmonics.

In the two examples in (4.1.93) and (4.1.94) it has been assumed that the rotor and stator have the same number of poles. This is necessary for successful operation of the machine as a power converter. If the rotor and stator had different numbers of poles, the mutual inductance between rotor and stator would be zero and, as evidenced by the terminal relations (4.1.1) to (4.1.3), the electromechanical coupling would disappear. To verify qualitatively that this is so, consider the machine in Fig. 4.1.31 which has a two-pole rotor and a four-pole stator. We can see that if the system has the usual type of symmetry and the stator is excited by direct current the result is that no net flux links the rotor circuit due to stator excitation for any rotor angle θ and the mutual inductance is indeed zero.

By carrying out a process similar to that used in Section 4.1.2, we find that the condition that must be satisfied by the frequencies and mechanical speed (4.1.18) for average power conversion must be generalized for a p-pole-pair machine to

$$\omega_m = \frac{1}{p}(\pm\omega_s \pm \omega_r). \tag{4.1.95}$$

Thus for given electrical frequencies the mechanical speed is reduced as the number of poles is increased; for example, for a synchronous machine operating on 60-Hz power,

$$\omega_s = 2\pi 60 \quad \text{and} \quad \omega_r = 0,$$

the mechanical speed is

$$\omega_m = \frac{2\pi 60}{p};$$

$$\begin{aligned} &\text{for } p = 1 \quad \omega_m = 120\pi \text{ rad/sec} = 3600 \text{ rpm},\\ &\text{for } p = 2 \quad \omega_m = 60\pi \text{ rad/sec} = 1800 \text{ rpm},\\ &\text{for } p = 15 \quad \omega_m = 8\pi \text{ rad/sec} = 240 \text{ rpm}. \end{aligned}$$

For a synchronous machine the maximum obtainable shaft speed is produced by a two-pole machine. The speed can be set at any submultiple of this maximum speed by setting the number of poles.

The freedom to set the number of poles allows for optimum design of systems; for instance, in the generation of electric power at 60 Hz generators for operation with steam turbines have two poles (a few have four) because steam turbines operate best at high speeds. On the other hand, generators for operation with hydraulic turbines (water wheels) usually have many poles, often as many as 40 or more, because hydraulic turbines operate best at low speeds.

Examination of Fig. 4.1.30 shows that the wire in the slots of the four-pole configuration could be reconnected at the end turns to yield a two-pole configuration. Thus a machine can be made to operate at two speeds by changing the number of poles. This is done frequently on induction machines for with a squirrel-cage rotor no rotor reconnections need to be made; for example, induction motors that drive automatic washing machines often operate with four-poles for the washing cycle and are reconnected as two-pole machines to run at approximately twice the speed for the spin-drying cycle.

It is clear from the foregoing analyses and discussions that a rotating machine is conceptually a simple device. It is simply a magnetic field-type, lumped-parameter, electromechanical device whose principal properties can be deduced by the straightforward techniques of Chapters 2 and 3. The many constructional variations (multipole and polyphase) and the wide variety of

possible excitations and characteristics lead to long and cumbersome, though necessary, mathematical analysis.* The amount of mathematics required should never be mistaken for conceptual complexity. Moreover, advantage should always be taken of the orderly mathematical procedures made possible by the symmetries that exist in machines.†

4.2 SALIENT-POLE MACHINES

The second geometrical configuration of rotating machines to be considered is that of the two-pole, single-phase, *salient-pole* machine illustrated in Fig. 4.2.1. This machine gets its name from the fact that one member (the rotor in Fig. 4.2.1) has protruding or *salient poles* and thus the air gap is not uniform around the periphery. The stator coil in Fig. 4.2.1 is shown lumped

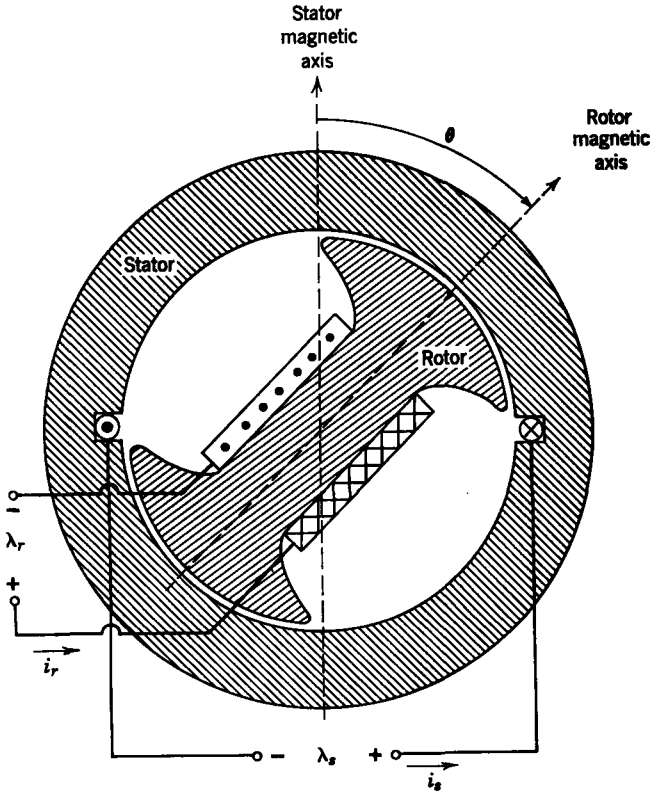

Fig. 4.2.1 Two-pole, single-phase, salient-pole machine with saliency on the rotor.

* See, for example, White and Woodson, *op. cit.*, Chapters 3, 4, and 7 to 11.
† White and Woodson, *op. cit.*, Chapter 4.

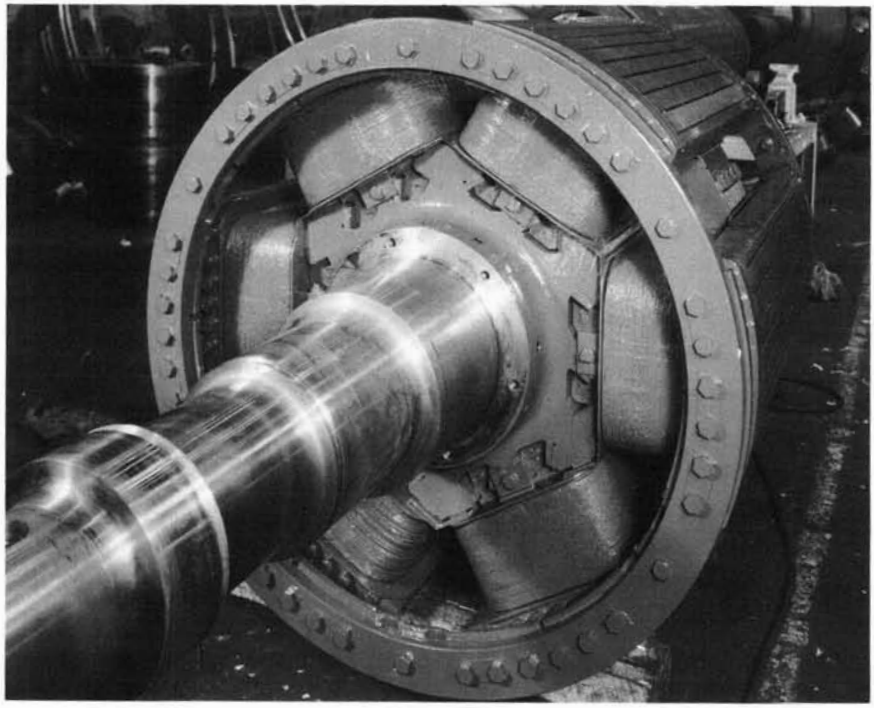

Fig. 4.2.2 Rotor of a salient-pole, synchronous motor. Note the method in which the coils are wound around the salient poles. (Courtesy of Westinghouse Electric Corporation.)

Courtesy of General Electric Company. Used with permission.

in two slots for simplicity. In practical machines the stator winding is distributed among several slots. The rotor winding in Fig. 4.2.1 is a fair representation of the method of winding salient rotors in practice, as indicated by the constructional details of the rotor for a salient-pole synchronous motor in Fig. 4.2.2. Another example of a salient-pole synchronous machine is shown in Fig. 4.2.3. This is a multipole generator driven by a hydraulic turbine. An example of a machine with saliency on the stator is the dc device in Fig. 4.1.27.

4.2.1 Differential Equations

Considering the system in Fig. 4.2.1 as an electrically linear, lumped-parameter, magnetic field-type, electromechanical device along the lines of Chapter 3, it is evident that the system is completely described when the inductances (electrical terminal relations) are known. Moreover, power conversion will occur only through inductances that depend on angular position θ; thus to assess the effects of saliency on power conversion properties it is necessary only to investigate the inductances.

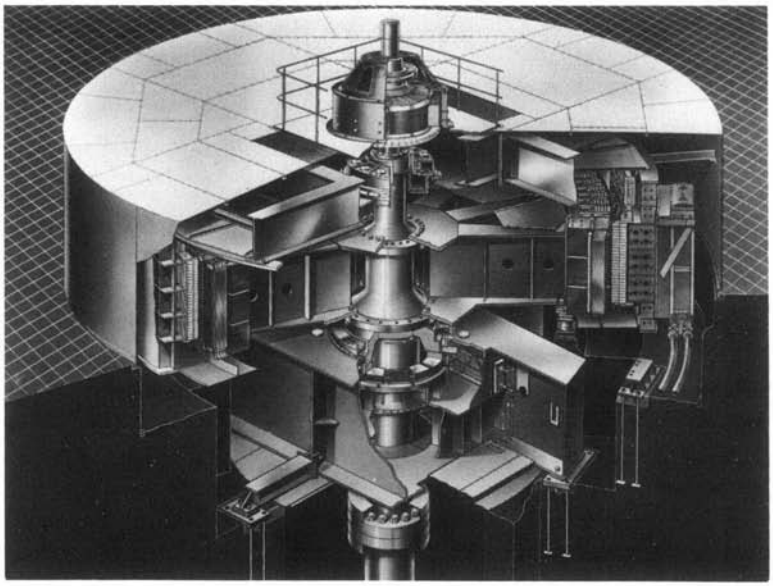

Fig. 4.2.3 Cutaway view of a hydroelectric generator. This is an example of a salient-pole, synchronous machine. (Courtesy of General Electric Company.)

First, when it is assumed that the slots that carry the stator winding in Fig. 4.2.1 cause negligible effects on the air-gap magnetic field, it is apparent that the self-inductance L_r of the rotor winding is independent of angle θ. It is also evident that the mutual inductance and the self-inductance of the stator winding depend on θ. Thus the electrical terminal relations can be written as

$$\lambda_s = L_s(\theta)i_s + L_{sr}(\theta)i_r, \tag{4.2.1}$$

$$\lambda_r = L_{sr}(\theta)i_s + L_r i_r. \tag{4.2.2}$$

Comparison of these expressions with the comparable ones for the smooth-air-gap machine (4.1.1) and (4.1.2) shows that the major difference introduced by saliency is the dependence of the stator self-inductance L_s on angular position θ, although an additional effect can occur in the form of the mutual inductance $L_{sr}(\theta)$.*

Consider first the stator self-inductance L_s. From the symmetry of the rotor structure in Fig. 4.2.1 it should be evident that the lowest space harmonic is the second because turning the rotor π rad in θ brings the inductance to its original value. This inductance is a maximum at $\theta = 0$ because the

* In polyphase machines saliency also affects the mutual inductances between windings on the nonsalient member. For an example of this and resulting forms see Section 4.2.2.

magnetic field encounters the smallest reluctance and a minimum at $\theta = \pi/2$ because the magnetic field encounters the maximum reluctance. Thus the stator self-inductance is expressible in general as

$$L_s(\theta) = L_0 + L_2 \cos 2\theta + L_4 \cos 4\theta + \cdots. \tag{4.2.3}$$

In the design of ac salient-pole machines the salient-pole structure is shaped to accentuate the cos 2θ term and to minimize all other space harmonics. Consequently, for the remainder of this treatment it is assumed that

$$L_s(\theta) = L_0 + L_2 \cos 2\theta. \tag{4.2.4}$$

This equation for inductance is often interpreted as representing the superposition of a smooth air gap (L_0) and a periodically varying air gap due to saliency ($L_2 \cos 2\theta$).

To ascertain the form of the mutual inductance $L_{sr}(\theta)$ we refer to Fig. 4.2.1 and reason physically. We recognize that reciprocity holds (Section 3.1.2c of Chapter 3) and consider flux linkages with stator windings due to rotor winding excitation by current of the direction indicated in Fig. 4.2.1. At the same time, we remember that the stator winding is actually distributed in many slots around the periphery to form a coil with the magnetic axis shown. Rotor position $\theta = 0$ results in maximum positive flux linking the stator winding, whereas rotor position $\theta = \pi$ yields maximum negative flux linkage. The symmetry indicates that these two maxima are of equal magnitude. As the rotor position θ is varied from 0 to π through positive angles, the flux linkage with the stator varies smoothly from the positive maximum to the negative maximum. Variation of rotor angle from 0 to π through negative angles gives exactly the same variation of flux linkages. Consequently, the mutual inductance is expressible as a Fourier series of odd space harmonics, exactly as it was in the smooth-air-gap machine in (4.1.4),

$$L_{sr}(\theta) = M_1 \cos \theta + M_3 \cos 3\theta + M_5 \cos 5\theta + \cdots. \tag{4.2.5}$$

Although the forms of mutual inductance for the two machine types are the same, it should be clear that for a given frame size the coefficients in (4.1.4) will have different numerical values for the two cases.

For salient-pole ac machines the winding distribution on the member without salient poles (the stator in Fig. 4.2.1) is designed to maximize M_1 and minimize all other terms in (4.2.5), just as is done for smooth-air-gap machines. For the remainder of this treatment it is assumed that this design objective has been met and the mutual inductance is expressed as

$$L_{sr}(\theta) = M \cos \theta. \tag{4.2.6}$$

Substitution of (4.2.4) and (4.2.6) into (4.2.1) and (4.2.2) and calculation

of the mechanical torque of electric origin, using the techniques of Chapter 3 [see (g) of Table 3.1], yield

$$\lambda_s = (L_0 + L_2 \cos 2\theta)i_s + Mi_r \cos \theta, \tag{4.2.7}$$

$$\lambda_r = Mi_s \cos \theta + L_r i_r, \tag{4.2.8}$$

$$T^e = -i_s i_r M \sin \theta - i_s^2 L_2 \sin 2\theta. \tag{4.2.9}$$

These terminal relations for the electromechanical coupling system can be used with whatever external electrical and mechanical sources or loads are connected to the machine terminals to write the differential equations for the machine system. For example, if we specify the terminal constraints as those given in Fig. 4.1.5, which include the parameters normally associated with that machine alone, the differential equations derive from Kirchhoff's voltage law and Newton's second law:

$$v_s = R_s i_s + \frac{d\lambda_s}{dt}, \tag{4.2.10}$$

$$v_r = R_r i_r + \frac{d\lambda_r}{dt}, \tag{4.2.11}$$

$$T^e + T_m = J_r \frac{d^2\theta}{dt^2} + B_r \frac{d\theta}{dt} + T_{or} \frac{d\theta/dt}{|d\theta/dt|}, \tag{4.2.12}$$

where (4.2.7) to (4.2.9) are used to express λ_s, λ_r, and T^e. These equations have exactly the same form as (4.1.9) to (4.1.11) for the smooth-air-gap machine, as is to be expected. However, the terminal relations are different for the two machines. Compare (4.2.7) to (4.2.9) for the salient-pole machine with (4.1.6) to (4.1.8) for the smooth-air-gap machine. The sources in (4.2.10) to (4.2.12), v_s, v_r, and T_m, are completely general and can be independent or dependent on some variable.

4.2.2 Conditions for Conversion of Average Power

To establish conditions for average power conversion in a salient-pole machine we assume excitation of the electromechanical coupling system by ideal current and position sources as illustrated in Fig. 4.1.6. The sources are

$$i_s(t) = I_s \sin \omega_s t, \tag{4.2.13}$$

$$i_r(t) = I_r \sin \omega_r t, \tag{4.2.14}$$

$$\theta(t) = \omega_m t + \gamma, \tag{4.2.15}$$

where I_s, I_r, ω_s, ω_r, ω_m, and γ are positive constants. Note that these constraints are the same as those we used with the smooth-air-gap machine (4.1.12) to (4.1.14).

The first term in the torque expressed by (4.2.9) has the same form as (4.1.8) for the smooth-air-gap machine. Consequently, all the discussions of average power conversion in Section 4.1.2 apply equally well to the first term of (4.2.9). In order for the mutual inductance term of the torque in a salient-pole machine to participate in average power conversion, one of the four conditions of (4.1.18), which relates electrical excitation frequencies and mechanical velocity, must be satisfied. This condition is

$$\omega_m = \pm\omega_s \pm \omega_r. \tag{4.2.16}$$

The unique effect of salient poles on the power conversion process is represented by the second term in (4.2.9). With the terminal constraints of (4.2.13) to (4.2.15), the instantaneous mechanical power output of the coupling system due to the second term in (4.2.9) is

$$p_m = -\omega_m I_s^2 L_2 \sin^2 \omega_s t \sin (2\omega_m t + 2\gamma). \tag{4.2.17}$$

The use of trigonometric identities allows us to write this expression in the form

$$p_m = -\frac{\omega_m I_s^2 L_2}{4}\{2 \sin (2\omega_m t + 2\gamma) - \sin [2(\omega_m + \omega_s)t + 2\gamma] - \sin [2(\omega_m - \omega_s)t + 2\gamma]\}. \tag{4.2.18}$$

A sinusoidal function of time has an average value only when the coefficient of t in its argument goes to zero. The first term in braces in (4.2.18) has an average value when $\omega_m = 0$, which is uninteresting because for this condition the power conversion is zero. The second term has an average value when

$$\omega_m + \omega_s = 0 \tag{4.2.19}$$

and the third term has an average value when

$$\omega_m - \omega_s = 0. \tag{4.2.20}$$

These two conditions are expressed in the compact form

$$\omega_m = \pm\omega_s, \tag{4.2.21}$$

and when either condition is satisfied the average power converted is

$$p_{m(\mathrm{av})} = \frac{\omega_m I_s^2 L_2}{4} \sin 2\gamma. \tag{4.2.22}$$

Sufficient conditions for nonzero average power conversion are (4.2.21) and $\sin 2\gamma \neq 0$.

It is worthwhile to interpret this result in terms of rotating fields along the

lines of Section 4.1.4. Recall that single-phase excitation of the stator winding with a current of frequency ω_s yields two component field patterns rotating in opposite directions with the angular speed ω_s. Thus each of the two conditions of (4.2.21) is interpreted as the condition under which the salient-pole structure is fixed in space with respect to one component of a stator rotating field. As a result, it is reasonable to expect that the use of balanced polyphase windings and balanced polyphase excitation, which produce a constant-amplitude rotating field (see Section 4.1.4), with saliency can produce a constant power conversion with no pulsating terms. Such is the case; in fact, saliency is used in machines (synchronous and direct current) in which such a result occurs. An example that illustrates how saliency affects the steady-state behavior of polyphase synchronous machines is given in Section 4.2.4.

4.2.3 Discussion of Saliency in Different Machine Types

The conditions expressed by (4.2.16) and (4.2.21) are now used to assess the usefulness of saliency in the principal machine types. We must recognize that within the framework of our general treatment there are possibilities for numerous unique machine types and many nonstandard machines are built for special applications. Most of these machines can be analyzed by using the general techniques developed here.

The simplest machine in which saliency is exploited is the *reluctance motor*. In the nomenclature of Fig. 4.2.1 a reluctance motor has a salient-pole rotor, one or two stator windings, but no rotor winding. The stator windings are excited by single-frequency alternating current. The only torque produced by this machine is that due to saliency or the *reluctance* torque given by the second term of (4.2.9) at a mechanical speed defined by (4.2.21). Thus the reluctance motor is a synchronous motor because it converts power at only one speed, ω_s. The steady-state energy conversion properties of a single-phase reluctance motor were studied in Example 3.1.2. Because of poor efficiency and power factor, reluctance motors are made in small sizes for such applications as clocks and phonograph turntables. Like any other synchronous machine, a reluctance motor has no starting torque and is usually started as an induction motor.

Saliency is most often exploited to improve the performance of machines that can operate successfully without it. To determine which machines can be helped by saliency, we must know when (4.2.16) (smooth-air-gap) and (4.2.21) (saliency) can be satisfied simultaneously with the same excitation. In one case we set $\omega_r = 0$ and $\omega_m = \pm\omega_s$, which yields a synchronous machine. We consider this subject in some detail in Section 4.2.4.

Saliency is also useful in dc machines in which the stator excitation is direct current ($\omega_s = 0$) and the commutator produces rotor currents of

fundamental frequency $\omega_r = \omega_m$ (see Section 4.1.6c). In this case the saliency is on the stator and (4.2.21) is replaced by

$$\omega_m = \pm\omega_r, \tag{4.2.23}$$

which is the same form that (4.2.16) assumes with $\omega_s = 0$. Thus saliency on the stator of a dc machine can enhance the power conversion capability. This is also true for commutator machines that operate on alternating current.

Although salient poles are sometimes used in small, single-phase induction motors to simplify the construction and make the machines less expensive, they are never used in large induction machines. As demonstrated in Section 4.1.6b, an induction machine has alternating current on both rotor and stator. Moreover, the machine converts power only when the rotor is *not* in synchronism with the stator-produced rotating field. Consequently, (4.2.16) and (4.2.21) cannot be satisfied simultaneously and saliency in an induction machine will produce only an oscillating power flow with no average value. The attendant noise and vibration make saliency undesirable in an induction machine.

4.2.4 Polyphase, Salient-Pole, Synchronous Machines

Salient poles are used in many synchronous machines; for example, all large synchronous motors, synchronous condensers, and hydro generators have them. It is therefore worthwhile to examine the effects of saliency on steady-state machine performance. The results achieved with saliency are compared with those obtained with a smooth-air-gap machine.

For the analysis we assume the balanced, two-phase, two-pole configuration shown schematically in Fig. 4.2.4. As usual we show the stator coils concentrated in two slots per phase for simplicity, but we realize that in an actual machine the stator windings are distributed in many slots around the periphery while maintaining the same relative symmetries with respect to magnetic axes.

We have already written the electrical terminal relations for a salient-pole machine with a single winding on both the rotor and stator in Section 4.2.1 [(4.2.7) and (4.2.8)]. These equations are still valid, except that saliency adds an angular-dependent mutual coupling term between the two stator windings. In a smooth-air-gap two-phase machine there is no mutual inductance between the two stator windings. [See (4.1.19) and (4.1.20).]

To obtain the form of this mutual inductance between stator windings we reason physically by using the configuration in Fig. 4.2.4. When the rotor magnetic axis is aligned with the magnetic axis of either stator coil ($\theta = 0, \pi/2, \pi, 3\pi/2$), the flux produced by either coil is symmetrical with respect to its magnetic axis and there is no net flux linking one stator coil

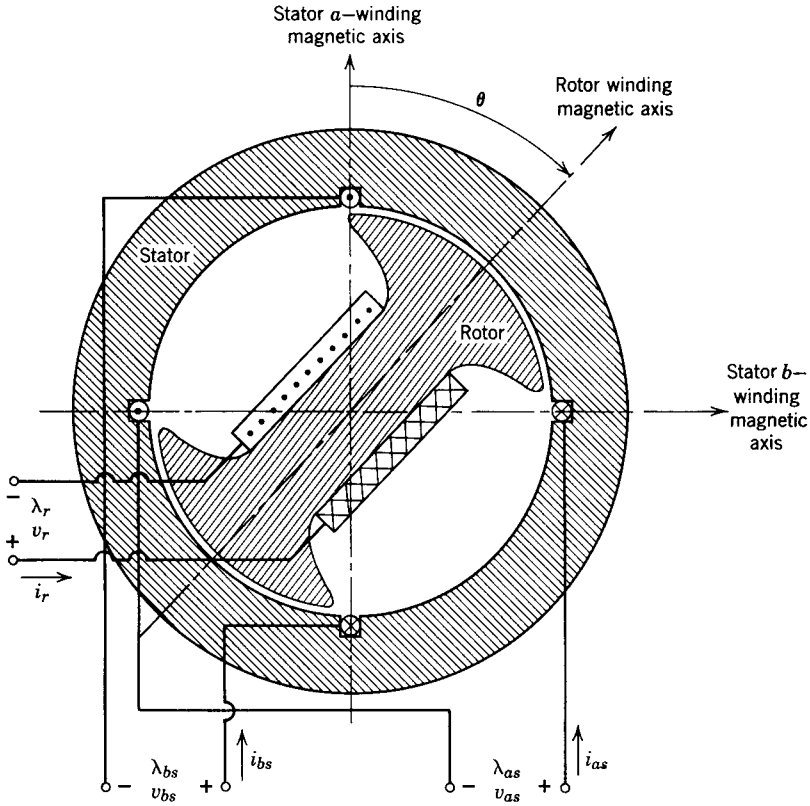

Fig. 4.2.4 Schematic representation of a salient-pole two-pole, balanced two-phase synchronous machine.

due to current in the other. Thus the stator mutual inductance L_{ss} is

$$L_{ss} = 0 \quad \text{for} \quad \theta = n\frac{\pi}{2}, \qquad n = 0, \pm 1, \pm 2, \pm 3, \ldots. \tag{4.2.24}$$

Now assume a current in stator coil a of the polarity shown. When θ is in the range $(0 < \theta < \pi/2)$, the salient poles distort the flux pattern due to i_{as} and tend to concentrate it at the pole where the air gap is smallest. Thus for $(0 < \theta < \pi/2)$ the flux linkage with winding b on the stator is positive. A similar argument shows that for the range $(-\pi/2 < \theta < 0)$ the flux linkage with winding b is negative. Using these facts, recognizing the machine symmetries, and realizing that reciprocity applies, we write the stator-to-stator mutual inductance as the Fourier series

$$L_{ss}(\theta) = M_{s2} \sin 2\theta + M_{s6} \sin 6\theta + M_{s10} \sin 10\theta + \cdots. \tag{4.2.25}$$

This expression is justified by making use of Fig. 4.2.4 to determine the field patterns as functions of θ.

As discussed in Section 4.2.1, the winding distributions and salient-pole shape are adjusted in ac machine design to accentuate the lowest space harmonic and to minimize higher space harmonics in inductance. This is also true of stator mutual inductance. To be consistent with the assumptions made in Section 4.2.1 that this design objective has been met we simplify (4.2.25) to the form

$$L_{ss} = M_s \sin 2\theta. \tag{4.2.26}$$

This second harmonic variation in stator mutual inductance results from the same distortion of flux pattern that causes the $\cos 2\theta$ term in stator self-inductance indicated in (4.2.7). Furthermore, both stator windings have the same number of turns and consequently we assume

$$M_s = L_2. \tag{4.2.27}$$

This assumption is justified by a careful field analysis of the machine* and is borne out in practice.

We now use (4.2.7) and (4.2.8) with (4.2.26) and (4.2.27) to write the electrical terminal relations for the machine in Fig. 4.2.4:

$$\lambda_{as} = (L_0 + L_2 \cos 2\theta)i_{as} + L_2 i_{bs} \sin 2\theta + M i_r \cos \theta, \tag{4.2.28}$$

$$\lambda_{bs} = L_2 i_{as} \sin 2\theta + (L_0 - L_2 \cos 2\theta)i_{bs} + M i_r \sin \theta, \tag{4.2.29}$$

$$\lambda_r = M i_{as} \cos \theta + M i_{bs} \sin \theta + L_r i_r. \tag{4.2.30}$$

In writing (4.2.29) we have replaced θ with $(\theta - \pi/2)$ in (4.2.28) to obtain the self-inductance and stator-to-rotor mutual inductance terms. This change accounts for the angular difference of $\pi/2$ in the positions of the two stator coils. This equation (4.2.29) could have been obtained by reasoning physically with Fig. 4.2.4 and using the assumptions we have for design objectives.

The use of (4.2.28) to (4.2.30) with the techniques of Chapter 3 [see (g) of Table 3.1] leads to the mechanical terminal relation

$$T^e = M i_r(i_{bs} \cos \theta - i_{as} \sin \theta) - L_2(i_{as}^2 - i_{bs}^2) \sin 2\theta + 2L_2 i_{as} i_{bs} \cos 2\theta. \tag{4.2.31}$$

Equations 4.2.28 to 4.2.31 should be compared with (4.2.7) to (4.2.9) for a single-phase, salient-pole machine to see the effects of adding the second phase and with (4.1.35) to (4.1.38) for a smooth-air-gap, two-phase machine to see the effects of adding saliency.

In our study of the steady-state characteristics of the salient-pole synchronous machine we neglect stator winding resistances and mechanical losses

* White and Woodson, *op. cit.*, pp. 180–190.

and use the same excitations we had in Section 4.1.6a, namely balanced two-phase currents on the stator,

$$i_{as} = I_s \cos \omega t, \tag{4.2.32}$$

$$i_{bs} = I_s \sin \omega t, \tag{4.2.33}$$

direct current on the rotor,

$$i_r = I_r, \tag{4.2.34}$$

and the position source

$$\theta = \omega t + \gamma. \tag{4.2.35}$$

Like the smooth-air-gap machine in Section 4.1.6a, it can be verified by direct substitution that there is constant flux linking the rotor winding, hence no induced voltage. Thus we could have excited the field winding with a constant-voltage source, as is usual in practice. It is convenient analytically, however, to use the constant current of (4.2.34), and there is no loss of generality in the steady-state analysis. For realistic transient analyses a rotor winding voltage source with a series resistance must be used.

Substitution of (4.2.32) to (4.2.35) into (4.2.31) yields for the steady-state instantaneous torque produced by the electromechanical coupling system,

$$\begin{aligned} T^e = {} & MI_rI_s[\sin \omega t \cos (\omega t + \gamma) - \cos \omega t \sin (\omega t + \gamma)] \\ & - L_2I_s^2[\cos^2 \omega t - \sin^2 \omega t] \sin (2\omega t + 2\gamma) \\ & + 2L_2I_s^2 \cos \omega t \sin \omega t \cos (2\omega t + 2\gamma). \end{aligned} \tag{4.2.36}$$

The use of appropriate trigonometric* identities allows the simplification of this expression to the form

$$T^e = -MI_rI_s \sin \gamma - L_2I_s^2 \sin 2\gamma. \tag{4.2.37}$$

This instantaneous torque is constant because the stator windings with balanced excitation produce a constant amplitude rotating flux wave and the salient-pole rotor is at an instantaneous position fixed with respect to this rotating field.

Comparison of (4.2.37) with (4.1.43) shows that saliency has added a term to the torque expression for a smooth-rotor machine.

Neglecting stator (armature) winding resistance, the terminal voltage of stator winding a is

$$v_{as} = \frac{d\lambda_{as}}{dt}. \tag{4.2.38}$$

* $\sin x \cos y - \cos x \sin y = \sin (x - y)$; $\cos 2x = \cos^2 x - \sin^2 x$; $2 \cos x \sin x = \sin 2x$.

Substitution of (4.2.32) to (4.2.35) into (4.2.28) and that result into (4.2.38) yields

$$v_{as} = I_s \frac{d}{dt} \{[L_0 + L_2 \cos(2\omega t + 2\gamma)] \cos \omega t + L_2 \sin \omega t \sin(2\omega t + 2\gamma)\} + MI_r \frac{d}{dt} [\cos(\omega t + \gamma)]. \quad (4.2.39)$$

The use of trigonometric identities reduces this equation to the form

$$v_{as} = \frac{d}{dt} [L_0 I_s \cos \omega t + L_2 I_s \cos(\omega t + 2\gamma) + MI_r \cos(\omega t + \gamma)]. \quad (4.2.40)$$

We define the complex quantities

$$v_{as} = \mathrm{Re}\,(\hat{V}_s e^{j\omega t}), \qquad i_{as} = \mathrm{Re}\,(I_s e^{j\omega t}), \qquad \cos(\omega t + \alpha) = \mathrm{Re}\,(e^{j\omega t} e^{j\alpha})$$

and use the standard techniques of steady-state ac circuit theory to write

$$\hat{V}_s = j\omega L_0 I_s + j\omega L_2 I_s e^{j2\gamma} + j\omega M I_r e^{j\gamma}. \quad (4.2.41)$$

We define the complex voltage amplitude $\hat{E}_f$ generated by field (rotor) current, as we did for the smooth-air-gap machine in (4.1.19), as

$$\hat{E}_f = j\omega M I_r e^{j\gamma} \quad (4.2.42)$$

and rewrite (4.2.41) as

$$\hat{V}_s = j\omega L_0 I_s + j\omega L_2 I_s e^{j2\gamma} + \hat{E}_f. \quad (4.2.43)$$

This is the same form as (4.1.50) for the smooth-air-gap machine with the addition of the second term due to saliency.

Because of this term, it is not possible to draw a simple equivalent circuit for the salient-pole machine as we did in Fig. 4.1.12 for the smooth-air-gap machine. We can, however, draw vector diagrams to show the relations among variables as we did for the smooth-air-gap machine in Fig. 4.1.13. These diagrams, which illustrate generator and motor operation in the salient-pole machine, appear in Fig. 4.2.5. Note that the additional term due to saliency does not greatly change the over-all nature of the vector diagram.

When analyzing salient-pole synchronous machines with conventional nomenclature, the sum of the two reactance voltages ($j\omega L_0 I_s + j\omega L_2 I_s e^{j2\gamma}$) is normally decomposed into two components, one parallel to $\hat{E}_f$, called the *direct-axis* reactance voltage, and one perpendicular to $\hat{E}_f$, called the *quadrature axis* reactance voltage.*

To complete the description of the steady-state properties of salient-pole machines we need to assume stator excitation from constant-amplitude

* See, for example, Fitzgerald and Kingsley, *op. cit.*, Chapter 5.

voltage sources, as is done in practice, and to express the torque T^e in terms of the terminal voltage. It can be established quite easily from the vector diagram in Fig. 4.2.5*a* or 4.2.5*b* that

$$\omega(L_0 - L_2)I_s \sin\gamma = V_s \sin\delta \tag{4.2.44}$$

and

$$\omega(L_0 + L_2)I_s \cos\gamma = V_s \cos\delta - E_f, \tag{4.2.45}$$

where

$$V_s = |\hat{V}_s|,$$
$$E_f = |\hat{E}_f|;$$

δ is defined in Fig. 4.2.5 and is positive in the counterclockwise direction. The use of (4.2.44) and (4.2.45) to eliminate the angle γ and (4.2.42) for E_f in (4.2.37) lead to the desired form of the torque equation

$$T^e = -\frac{E_f V_s}{\omega^2(L_0 + L_2)}\sin\delta - \frac{L_2 V_s^2}{\omega^2(L_0^2 - L_2^2)}\sin 2\delta. \tag{4.2.46}$$

When we compare this result with (4.1.52) for the smooth-air-gap machine, we find that the first term of (4.2.46) is the same form as (4.1.52). The second term in (4.2.46) depends solely on the presence of saliency. When saliency is removed, $L_2 = 0$, the second term in (4.2.46) goes to zero, and the first term reduces to (4.1.52) for the smooth-air-gap machine.

The two terms of (4.2.46) are plotted separately with dashed lines and the

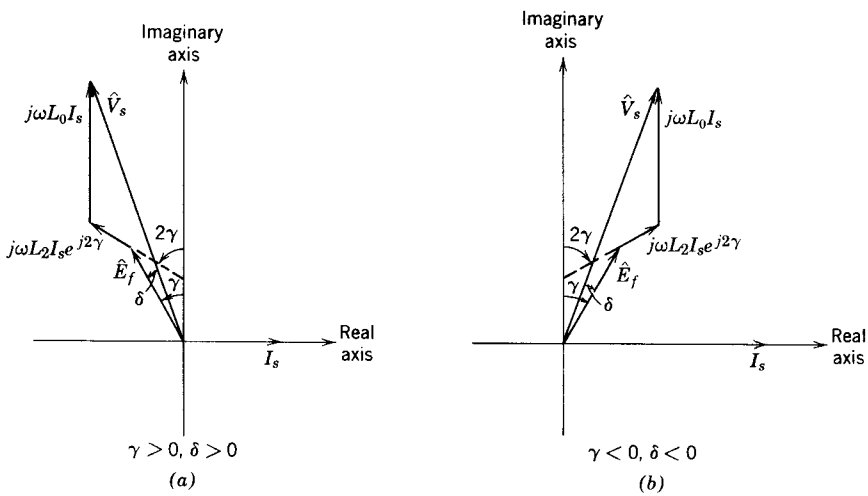

Fig. 4.2.5 Vector diagrams showing relations among variables in a salient-pole synchronous machine. Diagrams drawn for $L_0 = 3L_2$: (*a*) generator operation; (*b*) motor operation.

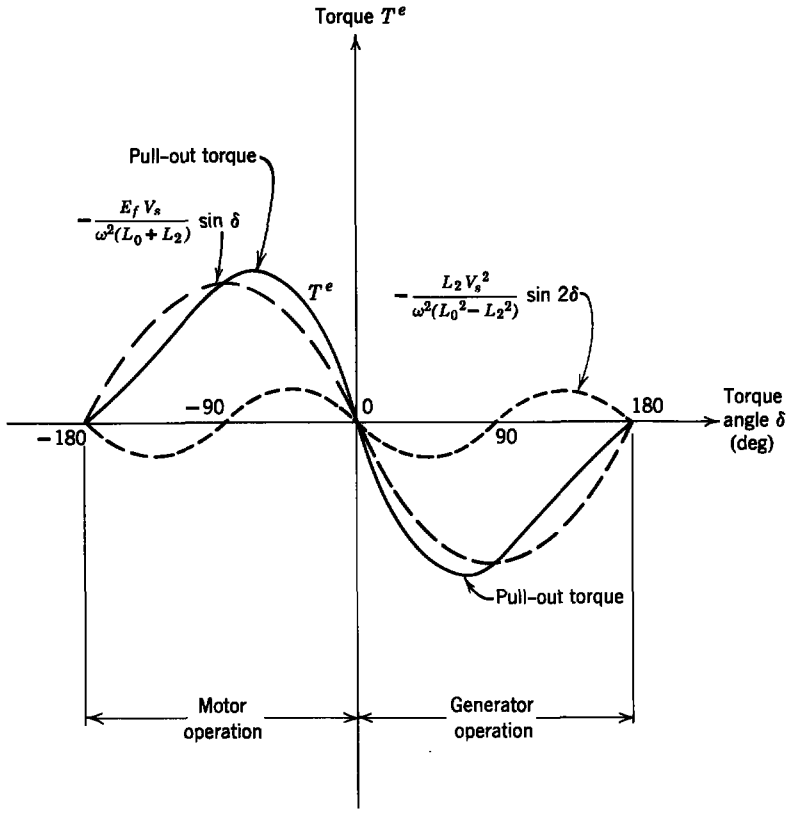

Fig. 4.2.6 Torque versus torque angle for a salient-pole synchronous machine. Curves plotted for $L_0 = 5L_2$ and $E_f = V_s$.

total torque in a solid line in Fig. 4.2.6. These curves are plotted for

$$L_0 = 5L_2,$$

which is typical for water-wheel generators,* and for

$$E_f = V_s.$$

Note from Fig. 4.2.6 that the presence of saliency has increased both the pull-out torque and the torque produced at small angles, which is quite important for transient behavior.

It should be clear from what we have done so far in this section that vector diagrams and V-curves can be drawn for salient-pole machines and that they will be similar to those for the smooth-air-gap machine shown in

* See, for example, Fitzgerald and Kingsley, *op. cit.*, Table 5-1, p. 237. In their nomenclature $X_d = \omega(L_0 + L_2)$ and $X_q = \omega(L_0 - L_2)$.

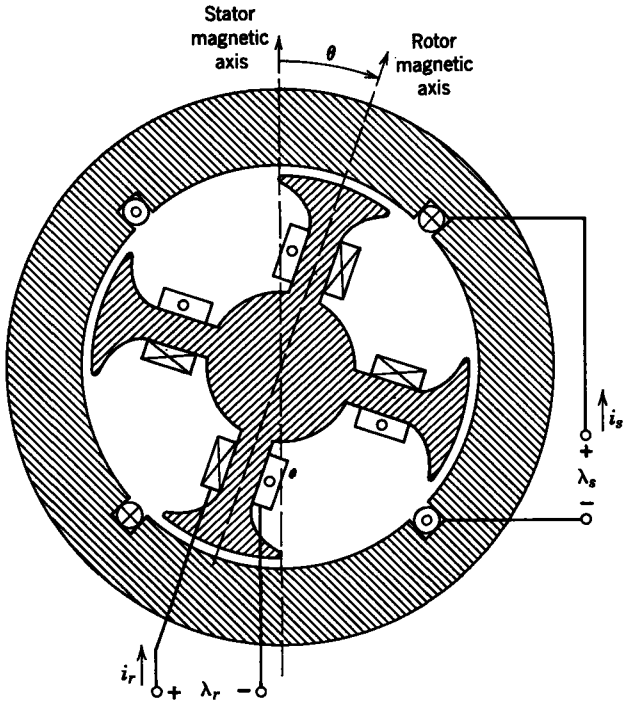

Fig. 4.2.7 Four-pole, single-phase, salient-pole machine with saliency on rotor.

Fig. 4.1.15. The process is straightforward and the interpretation is the same; consequently it is not repeated here.

All of the discussions of polyphase machines and excitations in Section 4.1.7 and of the number of poles in Section 4.1.8 apply equally well to salient pole machines, with the understanding that there is one polar projection per pole in a salient-pole machine; for example, Fig. 4.2.7 is a schematic drawing of a four-pole, single-phase machine.

In our discussions of synchronous machines in this section and in Section 4.1.6a we have made the point that a synchronous machine will produce a time-average torque and convert time-average power only at synchronous speed. Consequently, a synchronous machine alone can produce no starting torque. This is no problem with generators, but it is a problem with motors and synchronous condensers. A few machines are started by auxiliary starting motors, but the vast majority are started as induction machines. Conducting bars are mounted axially in the pole faces and shorted together at the ends to form a squirrel-cage winding, as shown for a motor in Fig. 4.2.2. Such a winding is conventionally called a *damper winding* or *amortisseur winding* because, in addition to acting as an induction motor winding for

starting, it also damps out transients in torque angle. Operation as an induction motor brings the speed to near synchronous speed. The torque oscillations resulting from the interaction between the rotor field due to dc excitation and the rotating stator field occur at the slip frequency, which is quite low. This allows the oscillating torque ample time to accelerate the rotor inertia and pull it into step at synchronous speed during one half cycle. In a turbogenerator the solid steel rotor provides enough induction-motor action for adequate damping and no separate damper winding is used (see Fig. 4.1.10).

4.3 DISCUSSION

At this point it is worthwhile to re-emphasize several points made in this chapter.

First, although we have treated two geometrical configurations, the techniques are applicable to other rotating machines by simple extensions and modifications. Thus we should understand the basic concepts that are quite simple physically.

Second, we have considered in some detail the steady-state characteristics of some standard machine types for two purposes: to illustrate how the transition is actually made from basic concepts to practical descriptions of steady-state terminal behavior and to present the characteristics of some of the most important rotating machines.

Next, when the reader thinks back through the material presented in this chapter he will realize that the basic concepts of energy conversion in rotating machines are quite simple, though the mathematics sometimes becomes lengthy. As we indicated earlier, the symmetries that exist in rotating machines have led to orderly mathematical procedures for handling the manipulation. Thus rotating machine theory may appear formidable at first glance, but we, you and the authors, know that this is not so.

Finally, we want to state again that among all electromechanical devices, past, present, and forseeable future, rotating machines occur in the greatest numbers and in the widest variety of sizes and types. Thus they form an important part of any study of electromechanics.